1950-51 NORTH AMERICAN SOCCER GUIDE

With Complete 1949-50 Records

$1.



Edited and Compiled *by Bill Graham*

THIRD YEAR

Telephone
ATwater 9-1360

Wholesale-Retail
Catalogue

The Home of Soccer

"Outfitters of Champions"

Since 1933

SOCCER SPORT SUPPLY CO.

343 East 86th Street, New York 28, N. Y.
(1st and 2nd Avenue)

Soccer Shoes:
Eagle Brasil
Manfield Hotspur
German Shoes
Cert Specials

Soccer Balls Official:
Soccer T
Soccer 12 Panel
Berg Champion
White Soccer
and
Practice Balls, etc.

Soccer Goal Nets
Official and
Goalie Gloves.
Padded Goalie Pants.



Soccer Uniforms:
In Stock
and Made-up
on Short Notice

Soccer Pants,
Stockings, Shinguards
and Elastics

Oscars, Trophies,
Medals and Diplomas

16" M/M Soccer
Sound Films

Steddy Rubber Twin
Studs
Field Markers

American and Gaelic Football, Bowling, Softball, Baseball, Tennis, Badminton, Skating and Skiing.

●

TEAM JACKETS WARM-UP SUITS JERSEYS

Goalpost Sockets, Corner Flags, Soccer Score Books & Library, Sport Bags, Nets for carrying Balls, and everything for the Sport.

Estimates cheerfully given. Open weekdays from 10 a.m. to 8 p.m. and appointments.

Society for American Soccer History

1950-51 NORTH AMERICAN SOCCER GUIDE

Published by

William Graham, 4705 Sixth Avenue, Brooklyn 20, N. Y.

PRINTED IN U.S.A.

Society for American Soccer History

FOULPROOF TAYLOR SELFGRIP SOCCER SHINPADS

Used in American Pro. Circuit and by dozens of high schools.
Small pair $**4.20** Medium pair $**5.25** Large pair $**6.00**
Special Price Team Orders (18 pairs)

- Shiftproof
- Waterproof
- Hammerproof



Lightweight

Bulk 3/8 inches

Cheap insurance

Manually adjustable to exact fit.
Perforated vulcanized fibre blow distributing plate.
Lined with foam rubber. Sealed in with outer rubber face.
Always amazes visiting foreign soccer stars.
Protects inner edges shinbones.

FOULPROOF TAYLOR CUPS

(U.S. Patent 1,830,572)

Brought about no Foul Rule

Adopted by James A. Farley Chairman N.Y.
Boxing Commission 1930.
Saved Boxing from Repeal after Sharkey-Schmeling foul.

4 inch Belt Laced in back for Snug Fit. Used by U.S. athletes in last three Olympic Games.

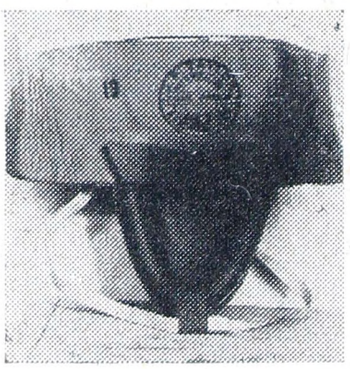

No. 19 Foulproof Cup with Hip Protectors and Blow Distributing Plate

Above No. 19 Cup worn by JOE LOUIS in every fight.

Used by U.S. Armed Forces for Commando Training in World War II. Vulcanized Fibre Blow Distributing Cup floats in reinforced foam rubber.

Also used by Soccer Goalies and Baseball umpires.

Small to 135 lbs.
Medium to 160 lbs
Large over 160 lbs.

503 East 4th Street
Brooklyn 18, N. Y.

Price $**14.00**
Rebate
Team Order

Society for American Soccer History

TABLE OF CONTENTS

SPECIAL FEATURES

Preface 5
U.S. 1949-50 Roundup, By Erwin Single 7
World Roundup 9
The Jeffrey Saga, By Ass't. Professor Lawrence Briggs 10
Soccer At Annapolis, By Coach Glenn F. H. Warner 11
Old Timers' Association, By Jasper Campbell 13
Hall of Fame, Pensketches & Pictures 14
Milestones, 1609-1950 18
Broadcasts & Publications 22

INTERNATIONAL

1950 World Cup Competition in Rio de Janeiro 23
1949 North American Zone Championships in Mexico City 25
Previous games, 1916-1948 132

NATIONAL

U. S. S. F. A. 26
New National Commission. Pen sketches and pictures 26
National Challenge, Amateur, Jr. Cups Commissioners 28
Affiliated Associations and Leagues with secretaries 29
National Challenge Cup 30
National Amateur Cup 33
National Junior Challenge Cup 36

PROFESSIONAL LEAGUES

American. Roundup by Erwin Single 36

STATE ASSOCIATIONS, LEAGUES, CLUBS, SECRETARIES, STANDINGS, GROUND LOCATIONS, SCHOLASTICS

California. By E. M. Plambeck & John Ardizzone 40
Connecticut. By Dick Davenport 43
Illinois. By George Fishwick 44
Maryland & D.C. By Millard Lang 47
Massachusettss East—By Sam Foulds 50
Michigan—By John J. MacEwen 51
Missouri—By Earl C. Grasser 52
New Jersey—By Edward R. Crowell 53
New York, North Western—By Frank Schlemitz & Al. Mort 55
New York Southern—By Dr. Eric Stoerger, Milt Miller, Joe Austin, Joseph Tolan, Charles Fink 56
Ohio—By Edward Kozdron 75
Pennsylvania East—By William Rodgers 76
Pennsylvania West—By Harry H. Fairfield 79
Southern New England—By William Morrissette, Manuel Oliveira, James Renwick, Anthony Piccione 80
Texas—By Al Collins 85
Washington—By Vic Weston 86

U.S. EXHIBITION TOURS ABROAD

1950 German-American League (N.Y.) to Germany 87
Previous games, 1916 to 1949 141

Society for American Soccer History

1949-50 FOREIGN TEAM TOURS IN U.S.

University of Havana 90
Hamburg S.V. of Germany 90
Manchester United of England 92
Besiktas F.C. of Turkey 94
Atlas F.C. of Mexico 95
Jonkoping F.C. of Sweden 96
All - England 97
Previous games, 1905-1949 148

INTERCOLLEGIATE
NATIONAL

National Collegiate Association 100
Intercollegiate Ass'n with member Universities & Colleges 101
National Coaches, Officers and Committees 119
1949 Outstanding team 121

LEAGUES

New England 102
Eastern (Ivy) 104
Middle Atlantic 106
Mason - Dixon 109
Northern California 111
Southern Conference 111
Metropolitan New York 112
Mid Western Conference 112

NON-LEAGUE UNIVERSITIES AND COLLEGES

California 112
Indiana 113
Maryland 113
Massachusetts 113
New Jersey 113
New York 113
Ohio 115
Pennsylvania 115
Rhode Island 117
Washington, D.C. 117

ALL-STARS TEAMS

Bowl Game, Penn State-University of San Francisco 117
All - American 117
All - New England 118
All - New York 118
Middle Atlantic 119
All - California Conference 119

DOMINION OF CANADA

National Association 123
National Champions 124
Province of Ontario 125
Province of Quebec 130
Canadians Abroad 131

LAWS OF THE GAME

With U.S. and Collegiate variations 165

Society for American Soccer History

PREFACE

This publication, now in its third year, because of a meager nibbling at records North of the Border, has changed its name from the U. S. SOCCER GUIDE to the rather ambitious appellation of the NORTH AMERICAN SOCCER GUIDE. It is believed to surpass previous issues in that it has also enlarged its U. S. coverage and is more compact. Several previous errors have been corrected.

Dr. G. Randolph Manning corrects the date on which the U.S.S.F.A. became affiliated with the International Federation. Always assumed to be August 1913, the good doctor, present at the conclave, avers it was at the Oslo Congress in May 1914.

Dent McSkimming, St. Louis Post Dispatch, ever-jealous of the reputation of the Mound City, points out that the accredited 3-0 victory of Botafogo F. C. of Brazil over St. Louis Shamrocks in April 1936 was in reality a 3-3 tie. Also the 3-2 win given Audax F. C. of Chile over Stix, Baer & Fuller in October 1933 should be reversed thus giving the South Americans their only defeat in nine U. S. starts.

Wilson Hobson of the Quaker City, asks, quite correctly, that the organization of the oldest league in the country, the Philadelphia Cricket Clubs Soccer League in 1902, be recorded in Milestones.

The cover picture depicts a desperate attempt by Goalie Felix Goldstein of the German-American League All-Stars to intercept a net-bound ball at Randalls Island. Taken by Patrick Burns it is again published with permission of the New York Times.

While previous issues held little of interest to Canadians, copies, which infiltrated the border, brought requests for the inclusion of local records and the present chapter comes from leads given by McLaren McKellar, D. F. A. secretary. These were, in turn, boosted by A. M. MacGregor, secretary Ontario F. A. Commission.

In addition to supplying local records, U. S. All-Star lineups against touring foreign teams were taken from stories by Tom Connell, Newark News; Max Behrens, Staats Herold, Harry Fairfield, Pittsburgh Press; George Fishwick, Editor, National Soccer News; Dent McSkimming, St. Louis Post Dispatch; Nicolaas Steelink, Editor, Cosmoplitan Soccer News; J. R. Almedia, Ludlow, Mass.; John Ardizzone, San Francisco; A. L. Mort, Rochester, N. Y.; E. M. Plambeck, Los Angeles.

Canadian lineups against foreign tourists were taken from stories by Bill Entwistle Toronto Star; Bill Cole, Toronto Telegram; F. W. Thirkettle, Toronto National League secretary; Doug Campbell, Montreal Star; Phil Wade, Saskatoon Star-Phoenix; Austin Delany, Vancouver Sun; Jim Tang, Victoria Colonist; Bill Walker, Victoria Times; John Rimmer and Bill Burgess, Calgary Herald; Bill Johnson, Calgary Albertan; Scotty Harper, Winnipeg Free Press; Dave Bridges, Windsor Star.

Thanks are extended to Joe Barriskill, U.S.S.F.A. executive secretary for mass of detail and to Erwin Single, Editor of Soccer News, for his masterful World and U. S. Roundups. Also the Intercollegiate Association and its coaches for their ready response for information and the assoiciation, league and club secretaries whose names appear along with their material.

September 15th, 1950 BILL GRAHAM

Society for American Soccer History

1949 NATIONAL CHAMPION OK'D



Courtesy Pittsburgh Post-Gazette

Felix Mitchell of Morgan, in rear, blocking boot by Gino Pariani of St. Louis and forcing Mound City star to kick out of bounds in second game of two game series in Western Final. Simpkins of St. Louis won by 2-0 and took series with 6-1 score.

Society for American Soccer History

1949-50 U.S. ROUNDUP

By Erwin Single, Editor Soccer News.

When the soccer historians get around to chronicling the state of soccer in these United States, June 27, 1950 will go down as the red letter day in American soccer. It was on that day, in faraway Belo Horizonte deep in Brazil, that the United States World Cup team scored the most sensational upset of all-time, a 1-0 victory over the highly favored All-England team. A goal by Joseph Gaetjens, sensational goal tending by Frank Borghi, clever play-making moves by the two Souzas and memorable halfbacking by Mc Ilveney-Colombo-Bahr were cited as the major factors in the excited cables coming out of Brazil.

And an almost unknown group of eleven soccer players had succeeded in doing more for Brazilian-American relations than all the diplomats we had ever exchanged! The players were carried off the field by the jubilant neighbors to the South, who had been traditional friends of the underdogs throughout the 90 exciting minutes of action.



HISTORY MAKERS—U.S. TEAM THAT DEFEATED ENGLAND. Standing L. to R. — Bill Lyons, trainer; Joseph Maca, Charles Colombo, Frank Borghi, Harry Keough, Walter Bahr, Bill Jeffrey, coach; Kneeling, L. to R. — Frank Wallace, Ed McIlvenny, Capt.; Gino Pariani, Joe Gaetjens, John Souza, Ed Souza.

Earlier that week, the United States team almost trounced Spain in the self-same fashion. But, going into the last quarter hour, the pace began to tell and their 1-0 lead dissolved into a 3-1 setback.

On the following Sunday, they were good for one more typical rally. With Chile leading by 2-0, the U.S. team managed to pull even. But, once again, the pace was too much and the team went down to an altogether creditable 5-2 defeat.

Earlier this spring there were already indications that our international

Society for American Soccer History

mettle was far from brittle. Just one day before departing for Brazil, the selfsame team held the touring English Football Ass'n team to a slim 1-0 score and, with any kind of luck, might have come off with at least a tie. A few Sundays before, a determined Kearny-Philadelphia eleven outplayed Manchester United most of the way and came up with a 2-2 tie against the crack English First Division club.

Elsewhere, too, the American teams were doing better in their tests against invading foreign teams. The New England All-Stars held Besikta of Istanbul to a 1-1 tie and Ludlow earned a 3-3 standoff against Sweden's Jonkoping Club.

The National Challenge Cup remained in the West as Simpkins St. Louis regained the cherished trophy after a one-year lapse by beating Ponta Delgadas of Fall River in the home-and-home Grand Final. Fall River's famed Ponta Delgadas became the first team ever to win the U.S. Amateur Cup five times, defeating Harmarville, Pa., on the latter's own grounds after the West Penn team had come up with a tie at Tiverton, R.I.

Soccer's comeback in New Jersey became more and more pronounced as the Harrison S.C. Juniors captured the National Junior Cup on a three-corner kick margin from Seco Juniors of St. Louis, after the teams remained deadlocked in goals at 1-1. The powerful Paterson Dovers further emphasized the new strength in the Garden State by copping both the New York as well as the New Jersey State cup, along with the championship of the National League.

Most league races ran true to form. Philadelphia Nationals repeated in the American League but failed to retain the Lewis Cup which went to New York Americans. Eintracht completed its comeback with a onesided victory in the German-American League and the signing of former Liverpool fullback Bernard Ramsden as coach of the team. German-Americans dropped to the Premier Division with Hoboken coming right back into the Big Ten after a one-year lapse.

In New England, the league championship went to Ludlow, but once again the big powerhouse in cup competition was Ponta Delgadas. Other familiar standbys also held their ground throughout the season with Morgan S.C. in West Penn., the Polish-Americans (re-named Eagles) in Chicago, and Simpkins in St. Louis all doing well in league as well as cup competition.

Televised indoor soccer made its bow in Chicago and developed into a hit of mansized proportions. All eyes are on Chicago to see what the new indoor season will bring.

The German-American League's promotion of the six-game Hamburg Sport Verein visit opened the Spring foreign tours and drew a capacity house for its New York inaugural at Randall's Island. Manchester United and Besiktas Istanbul, two colorful, crowd pleasing teams, followed under American League sponsorship. Chicago interests again brought over a topnotch Swedish team, this time the Jonkoping Club. Dream games involving Manchester, Istanbul, Jonkoping, the touring English All-Sta and Atlas Guadalajara again captured the public fancy. They were playe at New York's Polo Grounds, at Kearny, Toronto, Chicago and Los Angeles and made many a new soccer convert all along the way.

Throughout the soccer circuits, junior and juvenile promotion continued to reveal marked progress, so that 1949-50 may well go down into the records as the most successful of all post-war seasons.

Society for American Soccer History

1949-50 WORLD ROUNDUP—By Erwin Single



Erwin Single

The world's soccer spotlight shifted to Brazil in June of this year, where some 30 of the world's foremost booting nations came to grips in the first post-war World Cup Tournament. After the initial shock of having favored England bow before the U.S. and Spain by successive 1-0 scores had worn off, the tournament settled down to a battle between the two South American bigwigs, Brazil and Uruguay.

Record crowds of 150,000 turned up at the new Municipal Stadium in Rio de Janeiro and, when Brazil and Uruguay fought their way into the finals, an all-time high of 177,000 enthusiasts jammed their way into the stadium. Favored Brazil took a 1-0 lead, but Uruguay rallied late in the game to win out by 2-1 as all of Rio was plunged into a night of sorrow. Sweden took a 3-1 decision over Spain to clinch third place.

In the English First Division, Manchester United, Wolverhampton and Liverpool had a nip and tuck battle all through the season only to see Portsmouth come on with a late flourish and retain the league championship. Totenham Hotspurs and Sheffield United earned promotion into the upper ranks, while Manchester City and Birmingham had to step down. London's mighty Arsenal Club captured the English F.A. Cup over Liverpool before a frenzied 90,000 at Wembley.

In Scotland, the Glasgow Rangers, as always, won everything that was to be won, both league and cup, even though the Hibs made a great run of it most of the way. The Light Blues defeated East Fife 3-0 before 122,000 in the cup final at Hampden Park.

On the continent, the strong, young VFB Stuttgart team took the German championship by a 2-1 score over Kickers Offenbach before a capacity crowd of 96,000 at Berlin's Olympic Stadium. At season's end, Dynamo Tiflis was out front in Russia; Bratislava led the league in Czechoslovakia and Honved had won the Hungarian championship. A six-point margin over Sporting gave Bemfica the championship of Portugal.

In France, the league championship went to Bordeaux, who wound up their 34-game stint with a six-point lead over Lille. But the French Cup went to third place Rheims. The booters from the Champagne country defeated the renowned Racing Club of Paris by 2-0 in the cup final.

A real humdinger of a league race was staged in Spain this year. On completion of the 26-game schedule only eight points separated first place A. C. Madrid from tenth place Sevilla. The champions rang up 33 points, followed by La Coruna with 32 and Valencia and Real Madrid with 31 each.

The Italian crown went to Juventus Turin who clung to their early lead to breeze home five points ahead of the F. C. Milano. Third place went to the team that toured the U. S. last July, the Milano Internationals, who finished eight points behind their derby rivals.

The sensational Malmoe Football Club in Sweden walked away with the honors. by a wide margin. The champs ran up a total of 42 points as against 27 for the second place Jonkopings, who dropped their last two league games before flying to New York.

Another well known club, Servette Geneva, is the new champion of Switzerland, beating out F. C. Basel for title honors. In Belgium, the F. C.

Society for American Soccer History

Anderlecht triumphed ahead of Berchem and Ghent. The A.F.K. Athens has just won the cup final in Greece, defeating Aris Saloniki by 4-0.

The Danish title has gone to K. B. Copenhagen, one point ahead of Akademisk, and in soccer-conscious though small Luxembourg a hectic two-way race between Duedelingen and The National ended with a one-point winning margin for Duedelingen.

THE JEFFREY SAGA

Presentation Speech by Asst. Professor Lawrence E. Briggs, Univ. of Mass



Coach Jeffrey

The honor award of the National Soccer Coaches Association of America has now been in existence long enough to establish it as an award of merit and a gesture of recognition that the recipient has maintained a long standing service to soccer. It is not an award but rather a tribute. It has that intangible something about it which binds men together in their appreciation of each others worth and is more vividly expressed by action than the inadequate word.

(A few months later further honors were heaped on Bill Jeffrey. U.S.S.F.A. President Walter Giesler appointed him coach to the U. S. World Cup team which played in Brazil. After leading Spain for the major portion of the first game the team caused a world wide sensation by defeating England. The victory and behaviour of the team is credited as doing more for U. S.-South American relations than all the ambassadors and professional good will spreaders who had gone before. Ed.)

In seeking the 1949 recipient your committee found a man whose influence has been woven into the stuff of other men's lives. William Jeffrey is a native of Edinburgh, Scotland, where he lived until he was twenty. During that period he was a star in semi-pro soccer and many leading professional teams sought his services. When not playing soccer he attended New Haven Victoria School and Trinity Academy both in Edinburgh.

In 1912 at the insistence of his mother, who desired to further prevent her son playing soccer, he went to his Uncle's home in Altoona. Soon after the Altoona railroad shops organized a soccer team and persuaded Bill to play. From that point on he played with Altoona, Homestead, Braddock, and Bethlehem Steel squads. In 1925 as playing manager of the Altoona team Bill took his team to play an exhibition game with State College. As a result he was offered a job as coach. Here Bill Jeffrey found his acre of diamonds and he has been at Penn State ever since.

Proceeding with his characteristic enthusiastic energy and leadership he has written soccer history at Penn State for twenty-four years. Instilling confidence in his boys, teaching them step by step, sharing their defeats

Society for American Soccer History

and discouragements, he has brought them to the pinnacle of intercollegiate soccer achievement. Let's look at the record: 134 wins, 21 losses, 27 ties, 13 unbeaten seasons, 9 unbeaten teams in a row which included a winning streak of 65 consecutive games and a list of 34 All American players for a grand total of 51 times. From almost nothing to this remarkable record is not done with mirrors.

His extra-curricular activities in soccer are many and varied. He is a past President of the National Soccer Coaches Association, a member of the National Selection Committee of the U.S.S.F.A., present chairman of the NCAA Rules Committee and has probably organized and participated in more amateur, high school and college soccer clinics to advance the sport, than any other individual (at least in 12 different States). He has given service far above the time required. Bill is the author of many soccer articles and books. He is a member of the American University of Professors, as well as a member of Phi Sigma Kappa and Sigma Phi Alpha.

Since 1926 Bill Jeffrey has served as an Instructor in Physical Education and an Instructor in Industrial Engineering. In 1941 he received his B.S. in Physical Education from Penn State College.

SOCCER AT ANNAPOLIS

By Glenn F. H. Warner, Coach, U. S. Naval Academy, Annapolis

On the banks of the Severn soccer is promoted on three levels. In the Drill Manual, prepared by the Department of Physical Training, the midshipman is given an introduction to the game. The Intra-Brigade Sports Program Manual gives further contact with this universal sport and the third, provided for those who wish to excel, is the competitive team, Plebe, Junior Varsity and Varsity.

Though soccer is played world wide many sections of the United States have never seen a game and many incoming Plebes have their introduction in Physical Training Drills. Many who have played in high school received the impression that there isn't much to the game and lack of competent instructors in the early grades has been responsible for the attitude that the sport is a "kick and run" game.

Fundamental skills and position play are stressed in the drills which every midmanship is required to take. The Drill Manual calls for each midshipman taking three drills his Plebe year, two drills his Youngster year. One drill each in coaching and officiating is given in the second class year. The drills have the general objective of developing skill, strength, endurance, agility and competitive spirit in order than they may:

1. Be capable of enduring physical hardships
2. Be proficient in training and instructing others
3. Acquire useful habits of physical fitness

Soccer certainly meets the general objective desired by the Physical Training Department at Annapolis.

Thirty six teams, one from each company, compete in the Intra-Brigade Sports Program in a Fall competition. A large area close to the Severn River has nine playing fields 80 yards by 50 yards. Teams are cut from the regular eleven to eight players, because of the size of the fields. A team consists of four forwards, two halfbacks, one fullback and one goalie. This organization places emphasis on the offense with

Society for American Soccer History

three defenders attempting to handle four attackers. The play is in tennis shoes which tends to prevent toe kicking. The officiating and coaching is handled by First Classmen.



NAVY TORPEDOES HAVERFORD. Navy Center Forward Tom Bryce bores through a hole in the Haverford defence for a goal. Others, in dark sweaters, are Andy Lucine, Carl Spaeth and Goalie Joseph Wood, all of Haverford. An official, William Merritt, is on extreme right.

The Intra-Brigade Sports Program, which places soccer high on the list, is an essential part of the Physical Training Program at the Academy. It affords each midshipman a minimum of three hours exercise weekly through participation in organised athletics, not only teaching the skills, but developing aggressiveness, determination, will-to-win and the essentials of team work. The interest stimulated in these sports through participation will continue after graduation and serve as a medium of exercise and recreation after joining the fleet. The opportunities afforded members of the First Class to employ initiative and gain experience in coaching and managing teams and in officiating the many contests is of a value that cannot be fully appreciated until an officer is called upon to perform these duties in fleet athletics.

The Department of Athletics prepares schedules for all teams. The Varsity is a member of the ten-team Eastern (Ivy) Intercollegiate League. In the Spring informal practice of five weeks duration is held at which time fundamentals are stressed. Practice games are played with club teams from nearby Baltimore and this provides the opportunity to look over last year's Plebe team members.

The value of visual aids is recognised and the film library contains films which are valuable to both the beginner and the Varsity player. The budget allows money to film one or more big games. This past May movies were taken of the Manchester United of England and the American League All-Stars at Randalls Island.

Society for American Soccer History

All midshipmen at the Academy receive enough soccer to enable them to understand and enjoy the sport as a spectator if opportunity presents in a foreign port. Approximately 400 go further and play competitive soccer with a low but improving grade of skill. The three Academy teams allow better than 100 midshipmen to develop skill where they can compete with the best collegiate teams in the country.

PHILADELPHIA OLD TIMERS' ASSOCIATION

By Jasper Campbell



OFFICERS 1950-51. Standing L. to R. — Harry Feming, first V.P.; Harry Robinson, Commissioner Hall of Fame; Gus Monk, second V.P.; Front L. to R. — Joseph Wambach, treasurer; William Hawkins, President; Jasper Campbell, secretary.

The Philadelphia Old Timers' Association grew from a sentimental idea in 1946 between Joseph Wamback and myself that there should be a reunion of the players who booted for Merchant Shipyard in Harrison, Pa., more than 30 years before. Before it was put into execution it was decided to make the affair at least city-wide.

With the aid of telephone directories about 100 Old Timers' were rounded up and the reunion, with 133 attending, took place Feb. 26, 1947, at the Jolly Post in Frankford. Profits were turned over to the veterans at Valley Forge Hospital.

The consensus of opinion was that an association be started and later a meeting was held at which Williams Hawkins was elected president, Harry Fleming and Gus Monk, vice presidents; Joseph Wambach, treasurer and Jasper Campbell, secretary.

News of the activities commenced to spread and applications for membership were received from Atlantic City, Baltimore, Bethlehem, Brooklyn, Camden, Chester Fall River, Kearny, New York City, Newark, Trenton, Providence and Wilmington and the roster increased to 500

Society for American Soccer History

with the expressed purpose of returning the Quaker City to its former soccer glories of the early 20's.

At the 1949 reunion, held at the Rifle Club Feb. 26 and attended by 400, a cup was donated to the Philadelphia Midget League and awards were made to the Most Deserving Old Timers, J. B. Farrell, former president of the Allied S. L. and Williams T. (Big Bill) Wilson for his outstanding work in promoting the sport in Chester and the Merchant Ship yard.

With membership growing and a file of more than 800 Old Timers' emphasis was placed on the Philadelphia schoolboy and every school in Philadelphia is being canvassed to put the sport on its athletic program.

Came the idea of a Hall of Fame and with the recommendations of the State Associations as a guide 15 members were elected to the Shrine and 29 names put on the Honorable Mention list.

At the 1950 reunion, held Feb. 18 at the Rifle Club and attended by more than 400, the awards were made with many of the electees attending. Awards were also made to John Bedford, 76 years, former manager of the Tacomy and Disston teams and William Tyas, 86 years, former manager of the Kensington C.C. as the Most Deserving Old Timers'.

1949-50 officers—William Hawkins, president; Harry Fleming and Gus Monk, vice presidents; Joseph Wambach, treasurer, Jasper Campbell, secretary and Harry Robinson, Hall of Fame Commissioner, concluding a successful term were reelected for another year.

HALL OF FAME



DR. JOHN J. BROCK. Captain and coach of the first soccer team at Springfield College in 1906. Graduating in 1910 he returned to the college in 1920 as a member of the physical education faculty and became varsity coach in 1929. During his regime the Maroon booters won the National championship twice and the New England Intercollegiate title four times. Retired before the war but returned to coach in 1946 and 1947 when his teams were undefeated throughout the two seasons and were designated as National champions by the Soccer Coaches Association.



ANDREW M. BROWN. President of the American Association which sponsored the American Challenge Cup and in 1913 is credited with finally persuading that organization to form the present parent body. Secretary of the U.S.S.F.A. from 1924 till 1926 and president from 1926 till 1928. Was chief trouble shooter thereafter. Attended Helsinki Congress of the F.I.F.A. when the U.S.S.F.A. was threatened with expulsion. Also present at the Barcelona Congress. After receiving appointments as goodwill ambassador to the Dominion of Canada annual convention was striken with a heart ailment and died while driving from his home in Ohio to Toronto.

Society for American Soccer History



THOMAS W. CAHILL. As secretary of the American Amateur Association in 1913 played an important part in the forming of the present U.S.S.F.A. Presented claim for recognition at the F.I.F.A. Congress in Stockholm in 1912. Manager of U. S. teams which played in Sweden and Norway in 1916 and Bethlehem Steel team which visited Sweden and Denmark in 1919 and the St. Louis team to Sweden in 1920. Executive secretary of U.S.S.F.A. from 1913 till 1921 again in 1923 and 1924 and again from 1928 till 1930. Formed contact with Sir Thomas R. Dewar while visiting in London in 1912 which resulted in the latter donating the National Challenge Cup.



JOHN (JOCK) FERGUSON. Former Scottish and English professional. Played with Dundee North End, Arbroath and St. Johnstone and then joined major leaguer Dundee F. C. as fullback. Next with Leeds City of the English League. Coming to America played with Bethlehem Steel for nine successive seasons and returned to the same linseup after one season with Pawtucket. Played during the Bethlehem tour of Sweden and Denmark in 1919. In 1925 played for the United States against Canada in Montreal. Had faultless anticipation, accurate timing and a sure foot.



BILL GONSALVES. Outstanding American born player. Holder of record number of National Challenge Cup medals playing in eleven grand finals, winning eight and losing three. On the winning side with Fall River in 1930 and 1931, New Bedford in 1932, Stix Baer and Fuller of St. Louis in 1933 and 1934, Central Breweries in 1935 and Brooklyn Hispano in 1943 and 1944. On the losing side in 1936, 1937 and 1939. Has played for U. S.teams in Rome, Germany, Mexico and Haiti. As a professional he was barred from Olympic Games participation.



SHELDON GOVIER. With the Pullman F. C. of Chicago for more than a quarter of a century. Center Halfback for Chicago All-Stars which was the only team to defeat the touring Pilgrims F. C. which was selected from the leading amateur clubs of England. Was a star baseball and rugby performer, a good boxer and one of the leading peddlers in the annual Pullman Bike Road Race. Was Alderman from the Ninth Ward (Chicago) from 1918 till 1932 when he was elected Clerk of the Appellate Court. Termed "impulsive but always voting on the right side." Died in 1948.

Society for American Soccer History



GEORGE (BARNEY) KEMPTON. Played for same club in Belfast as Micky Hamil, famed Irish international. Teamed with Tommy Low of Glasgow Rangers fame and played six years in Los Angeles and San Francisco. Moved to Seattle and played with Johnnie McLean, Johnnie Wood, Jim Daly, Billy O'Toole, Hugh Harvey, Harrison and others. Short spell in Vancouver and Prince Rupert then settled in Seattle 35 years ago. Secretary of the Washington State Assn. and now its Junior Commissioner. Booting scribe for the Seattle Post Intellingencer Organized and guided a 20-team Parochial League as Commissioner of Associated Boys' Club.



MILLARD LANG. Commenced playing with the Francis Scott Key school in Baltimore and continued with Poly Institute. Several times named on All-Maryland Scholastics. Joined Cantons and became top goal scorer after team entered American League. Moved to Cleveland and played with Graphite Bronze, then to Chicago with Sparta S.C. when it won National Open championship in 1938. Returned to Baltimore to play with Americans. Player coach for Baltimore S.C. for a few seasons then retired. President of the Maryland and D.C. State Association and now president of Baltimore Major League. Coaches Towson Juveniles and prolific writer for Soccer News.



HORACE EDGAR LEWIS. Born in Wales and emigrated at the age of 14 years. Became a $100,000 vice president of the Bethlehem Steel Co. and organized what was probably the greatest team ever to play in America. He endeavoured to set a standard of play which he hoped other club owners would follow. Donated the Lewis Cup which was intended to develop into the real championship trophy of the United States. Later became chairman of the Jeffrey Manfr. Co. of Columbus Ohio and then president of Jones and Laughlin. He died in 1948.



DR. G. RANDOLPH MANNING. President of American Amateur Assn. and became first president on formation of U.S.S.F.A. in 1913. President of the New York State Association from its reorganization in 1928 till 1948. Chairman of Foreign Relations Committee since inception. First to resign from American Olympic Committee as protest against games being held in Japan while latter was warring with China. In 1948 became first American to become council member of International Federation. Represented U.S.S.F.A. at almost all International Congresses. Born in London and served with U. S. Army in first world war. Retired as Colonel Surgeon.

Society for American Soccer History



ROBERT MILLAR. Played with St. Mirren F. C. of Scottish League. Emigrated in 1911 and played successively with Tocony, Brooklyn Field Club, Bethelhem Steel, Babcock & Wilcox, Robins Drydock, J. & P. Coats, Fall River, New York Giants, Indiana Flooring, New York Nationals and later managed the Giants and Newark. Holder of four National Open championship medals, Brooklyn Field Club 1914, Bethelhem Steel 1915 and 1919 and Nationals in 1929. Coach to U. S. World Cup team in 1930 which defeated Belgium and Paraguay at Montevideo. In 1925 played twice for U. S. at Brooklyn and Montreal, against Canada. In 1915 scored 54 goals in 33 games.



HARRY RATICAN. First played with Christian Brothers College and continued with St. Louis University. Joined the Ben Millers in 1911 and after four years joined Bethelhem Steel for another four years. Then Robins Drydock and Todd Shipyards. While playing with Fall River also coached the varsity team at West Point. Holder of National Open medals won with Bethlehem in 1918 and Robins in 1921. Toured Sweden with St. Louis team in 1920. Now coach to St. Louis All-Star teams and vice chairman of the Missouri Commission.



ARCHIE STARK. Emigrated from Scotland in 1912 at the age of 12 years to become the greatest native trained and prolific goal getting center forward of his time. Played with Scottish - Americans, West retired while playing for Irish-Americans. Toured Sweden and Denmark with the Bethlehem team in 1919 and as a member of Fall River toured Czechoslovakia, Austria, Jugo-Slavia and Hungary in 1930. Played for the United States against Canada in 1925 and 1926. Won National Open championship medal while with Bethlehem in 1926. On the losing side with Paterson in 1919.



DOUGLAS STEWART. Became president of the Thistle F. C. in Philadelphia in 1903 and in the same year organized and became secretary of the Football Association of Pennsylvania. The year following he organized and became president of the Referees' Association. Became head coach from 1910 to 1942 at the University of Pennsylvania and in 1913 played an important part in the organizing of the U.S.S.F.A. From 1913 till 1926 was president of the Football Association of Pennsylvania. Vice President of the U.S.S.F.A. in 1921 and 1922 and at various times has been chairman of the Rules and Revision and Appeals Committees.

Society for American Soccer History



PETER WILSON. After playing at right fullback as a professional with St. Johnstone of the Scottish League in 1896 and 1897 emigrated to America the following year. Settled in New Jersey, which was then the strongest soccer center in the country and played for some years with the Scottish-Americans then joined the Paterson Rangers and later the great Pawtucket team. Moving to Pennsylvania he played with the Hibernians of Philadelphia. Was an active player for 25 years.

HONORABLE MENTIONS

ILLINOIS—Joseph Triner, Peter Peel, John Wood.
MASSACHUSETTS—Tommy Fleming, Tommy Swords George Collins (Deceased)
NEW JERSEY—Dave Brown, Al Cooper, James Douglas, Tommy Duggan, William Fryer, George Post, George Tintle.
NEW YORK—Edward Donaghy, Rudy Epperlein, Rudy Kuntner, Peter Renzulli, Andrew Reber.
PENNSYLVANIA—Harold Brittan, Alec Cavins, William Gallagher, Thomas Gaynor, William Kirkpatrick, Alec McLaughlin, Bobby Morrison, Thomas Murray, Harry Pearce, Fred Pepper, Dick Spaulding (Deceased)

MILESTONES

1609 Spellman's "Relation of Virginia" makes first mention of football in America.
1840 Sport introduced at Harvard, Princeton and Yale
1862 First ten rules of the game by J. C. Thring
1862 Sport barred at Harvard and Yale as being too rough
1866 Offside rule revised to embody principle now in force
1869 First intercollegiate game. Rutgers 6 Princeton 4
1874 Shinguards introduced
1875 Crossbar introduced
1878 Whistles first used by referees
1882 International Board formed
1882 Two-handed throw-in introduced
1884 American Football Association formed
1886 First game in Central Park, N. Y.
1886 First international game in North America. U.S.A. vs. Canada
1887 Two international games with Canada
1890 Kensington F.C. (St. Louis) first All-American born team
1890 Goal nets first used
1891 Penalty kick introduced
1898 Shamrock F.C. formed in Cincinnati
1898 Goal cannot be scored from a direct throw-in
1902 F.L. Associated Cricket Clubs formed in Philadelphia.
1904 Federation Internationale de Football Association formed in Paris

Society for American Soccer History

1905 Inception of sport in Cleveland, Ohio
1905 First Intercollegiate Association League. Columbia, Cornell, Harvard, Haverford and Pennsylvania
1905 Goalkeeper must remain on goal line until penalty kick is taken
1905 First U.S. tour by the Pilgrim F.C. of England
1906 William Maxwell Trophy for New York Public School Athletic League City championship
1907 Yale admitted to Intercollegiate Association League
1907 First U.S. tour by the Corinthian F.C. of London
1909 Second U.S. tour by the Pilgrim F.C. of England
1911 Second U.S. tour by the Corinthian F.C. of London
1912 Goalkeeper's privilege of using his hands restricted to his own penalty area.
1912 United States Challenge Cup donated by Sir Thomas R. Dewar
1913 United States of American Football Association instituted April 5.
1913 Law increasing opponents distance from six to ten yards at taking of free kick
1914 U.S.S.F.A. affiliated to F.I.F.A. Oslo Congress May 1914.
1914 First United States Open championship final. Brooklyn Field Club 2 Brooklyn Celtic 1
1916 United States All-Star team plays six games in Norway and Sweden
1919 Bethlehem Steel F. C. (Pa.) plays 14 games in Sweden and Denmark
1920 St. Louis (Mo.) Club plays 14 games in Sweden.
1920 A player cannot be offside when a throw-in is taken
1921 Third Lanark F.C. of Glasgow, Scotland, plays six games in U.S.
1922 Dick Kerr's Ladies team of Preston, England, plays 8 games in U.S.
1922 United States Amateur Challenge Cup offered for competition
1922 Goalkeeper in international games must wear sweaters of deep yellow
1923 Present German-American (N.Y.) League formed
1924 Goal can be scored direct from a corner kick
1924 Eighth Olympiad at Paris. First U.S. participation in Olympic Soccer
1924 Third U.S. tour by the Corinthian F.C. of London
1925 New offside rule. A player shall not be offside if two opponents (instead of three) ar nearer their own goal line.
1925 Two International games with Canada. Montreal and Brooklyn
1925 Change in throw-in rule. Both feet must be on ground and outside touchline
1926 Sparta F.C. (Czechoslovakia) plays 12 games in U.S.
1926 Hakoah All-Stars (Austria) plays 12 games in U.S.
1926 International game with Canada. Brooklyn.
1926 Intercollegiate Soccer Football Association formed. Cornell, Dartmouth, Harvard, Haverford, Lehigh, U.S. Navy, Pennsylvania, Pennsylvania State, Princeton, Swarthmore, Syracuse and Yale.
1926 Worcester (Mass.) team plays in Worcestershire, England
1927 Maccabi F.C. (Palestine) plays 10 games in U.S.
1927 Second tour of Hakoah F.C. (Austria). 12 games in U.S. and Canada.
1927 Uruguay National team plays 13 games in U.S.
1927 Real Madrid F.C. (Spain) plays one game in New York
1927 Worcestershire, England, team plays in Worcester, Mass.
1927 Vikings A.C. (New York) plays 33 games in Sweden and Norway

Society for American Soccer History

1928 Present New York State Association formed
1928 Present Metropolitan League (N.Y.) formed
1928 Ninth Olympiad at Amsterdam. U.S. participation
1928 Glasgow Rangers F.C. (Scotland) plays 10 games in U.S. and Canada
1929 Preston North End F.C. (England) plays 11 games in U.S. and Canada
1929 Palestra F.C. (Italy) plays 10 games in U.S.
1929 Sabria F.C. (Hungary) plays three games in New York
1939 New York Nationals play three games in Cuba
1929 Worcester (Mass.) team plays in Worcestershire, England
1929 Goalkeeper must stand still on goal line until penalty kick is taken
1930 Glasgow Rangers F.C. (Scotland) during second tour plays six games in U.S.
1930 Marte F.C. (Mexico) plays 10 games in U.S.
1930 World Cup competition at Montevideo. U.S. participation
1930 Hungaria M.T.K. (Hungary) plays eight games in U.S.
1930 Kilmarnock F.C. (Scotland) plays three games in U.S.
1930 Sportivo F.C. (Argentine) plays one game in New York
1930 German-American League (N.Y.) plays seven games in Germany
1930 Fall River F.C. (Mass.) plays six games in Czechoslovakia, Austria, Hungary and Jugoslavia
1930 Worcestershire, England, team plays in Worcester, Mass.
1931 Glasgow Celtic F.C. (Scotland) plays 11 games in U.S. and Canada
1931 Gjoa S.C. (Brooklyn, N.Y.) plays 29 games in Norway
1931 In case of foul throw-in, the throw-in reverts to the other side
1931 Velez Sarsfield F.C. (Argentine) plays three games in New York
1931 Goalkeeper when in possession of ball is permitted to take four instead of two steps
1931 Racing Club F.C. (Spain) plays nine games in U.S.
1931 Bella Vista F.C. (Uruguay) plays one game in New York
1932 Tenth Olympiad at San Francisco. No soccer tournament
1933 Present American League formed
1933 Audax F.C. (Chile) plays nine games in U.S.
1934 World Cup competition in Italy. U.S. participation
1934 New York Americans play eight games in Cuba and Mexico
1934 Pennsylvania State College plays eight games in Scotland
1934 Kladno F.C. (Czechoslovakia) plays eight games in U.S.
1935 First two-referee trials
1935 St. Mary's Celtic F.C. (Brooklyn, N.Y.) wins New York State Challenge Cup, Metropolitan District Challenge Cup and Metropolitan League pennant.
1935 Present Empire State Junior League (N.Y.) formed
1935 New York Americans play eight games in Mexico
1935 Scottish National team plays four games in U.S.
1936 Maccabi F.C. (Palestine) plays 12 games in U.S. during second tour.
1936 Eleventh Olympiad at Berlin. U.S. participation.
1936 At a goal kick the ball must be played forward by a direct kick and must travel outside penalty area before being in play.
1936 Botafogo F.C. (Brazil) plays two games in St. Louis
1937 Arc outside penalty area to enforce 10 yards rule at penalty kick
1937 Barcelona F.C. (Spain) plays four games in New York

Society for American Soccer History

1937 Three international games with Mexico in Mexico City
1937 Highlander F.C. (Trenton, N.J.) represents U.S. at Pan American Series at Dallas, Texas
1937 Charlton Athletic F.C. (England) plays six games in U.S.
1938 Laws of the game rewritten
1938 Present National League (N.Y.) formed
1939 Scottish National teams plays five games in U.S. during second tour
1940 Eastern District League (N.Y.) affiliated with N.Y. State Association
1940 Atlante F.C. (Mexico) plays six games in U.S.
1941 Puentes Grandes F.C. (Cuba) plays six games in U.S.
1941 Botafogo F.C. (Brazil) plays one game in New York
1941 National League (N.Y.) plays five games in Haiti
1941 Dr. Manning Challenge Cup substituted for N.Y. State Qualifying Cup
1941 Bay Ridge Hearts F.C. (Brooklyn, N.Y.) wins Empire State League Cup for fourth time in succession
1942 Atlante (F.C. (Mexico) plays six games during second tour of U.S.
1945 Brookhattan F.C. (N.Y.) wins National Challenge Cup, Lewis Cup and American League pennant.
1945 Eintracht F.C. (Astoria, N. Y.) wins National Amateur Cup, New York State Challenge Cup and German-American League pennant.
1945 United States Football Association and New York State Football Association add Soccer to title names
1946 U.S.S.F.A. allows use of four substitutes with resubstitution Jan. 17
1946 New York State Soccer Football Association-Province of Quebec Association annual home-and-home series inaugurated.
1946 Liverpool F.C. (England) plays 10 games in U.S. and Canada
1946 Puentes Grandes F.C. (Cuba) plays five games in U.S. during second tour
1947 Hapoel F.C. (Palestine) plays nine games in U.S.
1947 Ponta Delgada F.C. (Fall River, Mass.) wins National Challenge Cup and National Amateur Challenge Cup
1947 Ponta Delgada F.C. represents U.S. at Pan American Conference Series in Havana, Cuba.
1947 Ferencvarosi F.C. (Hungary) plays one game in New York
1947 Police Athletic League formed with 31 teams
1947 Two international games with Canada. Toronto and St. Louis.
1948 Ponta Delgada F.C. wins National Amateur Cup for third consecutive year
1948 Liverpool F.C. (England) plays 11 games during second U.S. and Canadian tour
1948 Djurgarden F.C. (Sweden) plays six games in U.S. and Canada
1948 First meeting of two major foreign teams on American soil. Liverpool-Djurgarden, Ebbets Field, Brooklyn, N.Y. June 18
1948 14th Olympiad at London. U. S. participation
1948 Opponents must be outside penalty area when goal kick is taken
1948 Dr. G. Randolph Manning elected to F.I.F.A. Council.
1948 Death of Andrew M. Brown, president U.S.S.F.A. 1926-27-28.
1948 Death of Horace Edgar Lewis, donor of Lewis Cup.
1948 Bratislava (Czechoslovakia) plays one game in Chicago.
1948 Two internationals with Canada. Montreal and Chicago.

Society for American Soccer History

1948 Israeli National team plays three games in U.S.
1948 Atlante F.C. (Mexico) plays six games on West Coast.
1949 New York Americans play three games in Cuba.
1949 Belfast Celtic (Ireland) plays ten games in U.S. and Canada.
1949 Scottish National team plays nine games in U.S. and Canada.
1949 Newcastle United (England) plays ten games in U.S. and Canada.
1949 Kamraterna (Sweden) plays nine games in U.S. and Canada.
1949 Milano Internazionale (Italy) plays six games in U.S. and Canada.
1949 U.S. defeats Cuba in Mexico City to qualify for 1950 World Cup.
1949 University of Havana plays five intercollegiate games in U.S.
1950 First bowl game. Pennsylvania State College-University, San Francisco, St. Louis Jan. 1.
1950 Hamburg F.C. (Germany) plays six games in U.S.
1950 Manchester United (England) plays twelve games in U.S. and Canada.
1950 Besiktas F.C. (Turkey) plays seven games in U.S.
1950 Jonkopping F.C. (Sweden) plays ten games in U.S.
1950 English National team plays twelve games in Canada and U.S.
1950 Atlas F.C. (Mexico) plays five games on West Coast and Canada.
1950 World Cup Competition in Rio de Janeiro. U.S. defeats England.
1950 Ponta Delgado (Fall River, Mass.) plays in Grand Finals of both National Championships.

BROADCASTS AND PUBLICATIONS

WWRL. 1600 kc (New York) Mondays 10:15 p.m. Sportscaster, Erwin Single; Sponsor, Munzenmaier Baked Quality Products.

WFDR. 104.3 fm. Fridays 9 p.m. Sportscaster, Milt Miller.

SOCCER, 1724 Hart Street, Brooklyn 27, New York. Monthly, $1.00 a year. Erwin Single, Editor; Harry Kraus, Business Manager; Milton Miller, Managing Edtior; Herman Meyn, Advertising Manager;Contributors, Eric Charleson, A. Frank Frisby, William Graham,Millard Lang. John G. Moser, Dr. Eric Stoeger.

NATIONAL SOCCER NEWS, 914 S. Lytle St., Chicago 7, Ill. Monthly. $1.00 twelve copies. George E. Fishwick, Editor. Contributors, Basil Stephenson, John Ardizzone, John MacEwen, Tom Richards, Harry Kraus, Abe Korsower, Marino Mazzei, Jeff Coombes, Caricatures by Buchegger.

COSMOPOLITAN SOCCER NEWS. 426 Holland Ave., Los Angeles 42, Calif. Weekly. $3.00 a year. Nicolaas Steelink, Editor.

AMERICAN LEAGUE NEWS, 235 Mount Hope Place, Bronx 58, New York. Distributed free at American League games in Brooklyn and Bronx, N. Y.; Kearny, N. J.; Philadelphia.

* * * * * *

Switzerland preparing for the 1954 World Cup will build six new 50,000 capacity stadiums.

* * * * * *

The take in the World Cup was $6,000,000. The U.S.S.F.A., as its share, will get $25,000 as expenses plus a few thousands as a dividend.

Society for American Soccer History

WORLD CUP—1950 CHAMPIONSHIP

President Walter Giesler appointed Fred W. Netto of Chicago, chairman; James McGuire of Brooklyn, Edward Sullivan of Philadelphia, Harry H. Fairfield of Pittsburgh and William Lyons of St. Louis as the new International Players' Selection Committee to select a team which would represent the United States in the World Cup Competition in Brazil during June and July.

Following a trial game, which ended in a 3-3 tie at St. Louis and another game against the All-England team, then touring Canada and which was extremely lucky to escape with a 1-0 win at Randalls Island, N. Y. on June 18 the following team which just "went for the ride" flew to Brazil the next day.

Player-Official	Club	Position
Frank Borghi	Simpkins F.C., St. Louis	Goalkeeper
Gino Gardassanich	Slovaks F.C., Chicago	Goalkeeper
Joseph Maca	Brooklyn Hispano, New York	Full Back
Harry Keough	McMahon F.C., St. Louis	Full Back
Robert Annis	Simpinks F.C., St. Louis	Full Back
Walter Bahr	Philadelphia Nationals	Half Back
Edward McIlveney	Philadelphia Nationals	Half Back
Charles Colombo	Simpkins F.C., St. Louis	Half Back
Jeff Coombes	Vikings F.C., Chicago	Half Back
Adam Wolanin	Eagles F.C., Chicago	Forward
Edward Souza	Ponta Delgada F.C., Fall River	Forward
John Souza	Ponta Delgada F.C., Fall River	Forward
Joseph Gaetjens	Brookhattan F.C., New York	Forward
Cino Pariani	Simpkins F.C., St. Louis	Forward
Frank Wallace	Simpkins F.C., St. Louis	Forward
Robert Craddock	Harmarville F.C., Pittsburgh	Forward
Nick DiOrio	Harmarville F.C., Pittsburgh	Forward
Walter Giesler	President U.S.S.F.A., St. Louis	Manager
William Lyons	St. Louis	Asst. Manager
William Jeffrey	Penn State College	Coach
Prudencio Garcia	St. Louis	Referee
Fred W. Netto	Chicago	U.S.S.F.A.
Dr. G. R. Manning	New York	F.I.F.A.
Dent McSkinning	Post-Dispatch, St. Louis	Reporter

June 25	U.S.A.	1	Spain	3	Curitiba
29		1	England	0	Bela Horizonte
July 2		2	Chile	5	Recife

Against Spain—Borghi; Keough, Maca; McIlveney, Colombo, Bahr; Wolanin, John Souza, Gaetjens, Pariani, Wallace. Goals, Pariani.

Against England—Borghi; Keough, Maca; McIlveney, Colombo, Bahr; Ed Souza, John Souza, Gaetjens, Pariani, Wallace. Goals, Gaetjens.

Against Chile—Same as Against England. Goals, Wallace, Maca

Society for American Soccer History



JUST BEFORE THE BATTLE AT BELA HORIZONTE. L. to R. — Captain Billy Wright of England, a linesman; Referee De LaSalle of France and Captain Ed McIlvenny of U.S.

TOURNAMENT RESULTS

GROUP 1. Brazil 4, Mexico 0; Yugoslavia 3, Switzerland 0; Yugoslavia 4, Mexico 1; Brazil 2, Switzerland 2; Brazil 2, Yugoslavia 0; Switzerland 2, Mexico 1.

	P	W	L	T	F	A	P
Brazil	3	2	0	1	8	2	5
Yugoslavia	3	2	1	0	7	3	4
Switzerland	3	1	1	1	4	6	3
Mexico	3	0	3	0	2	10	0

GROUP 2. U. S. 1, Spain 3; U. S. 1, England 0; U. S. 2, Chile 5; England 2, Chile 0; Spain 2, Chile 0; Spain 1, England 0.

	P	W	L	T	F	A	P
Spain	3	3	0	0	6	1	6
England	3	1	2	0	2	2	2
Chile	3	1	2	0	5	5	2
United States	3	1	2	0	4	8	2

GROUP 3. Sweden 3, Italy 2; Sweden 2, Paraguay 2; Italy 2, Paraguay

	P	W	L	T	F	A	P
Sweden	2	1	0	1	5	4	3
Italy	2	1	1	0	4	3	2
Paraguay	2	0	1	1	2	4	1

Society for American Soccer History

GROUP 4. Uruguay 8, Bolivia 0. France and Portugal defaults.

FINALS. Brazil 7, Sweden 1; Brazil 6, Spain 1; Brazil 1, Uruguay 2; Uruguay 3, Sweden 2; Uruguay 2, Spain 2; Sweden 3, Spain 1.

	P	W	L	T	F	A	P
Uruguay	3	2	0	1	7	5	5
Brazil	3	2	1	0	14	4	4
Sweden	3	1	2	0	6	11	2
Spain	3	0	2	1	4	11	1

PRELIMINARY GAMES

U. S. 1-5, Cuba 1-2; U. S. 0-2, Mexico 6-6; Cuba 0-0, Mexico 3-2; Turkey 7, Syria 0; Yugoslavia 6-5, Israeli 0-2; France 1-1-2, Yugoslavia 1-1-3; Switzerland 5-3, Luxembourg 2-2; Eire 3-1, Finland 0-1; Sweden 3-3, Eire 1-1; Spain 5-2, Portugal 1-2; Wales 0, Scotland 2; Wales 0, Northern Ireland 0; Wales 1, England 4; England 1, Scotland 0; England 9, Northern Ireland 2; Scotland 8, Northern Ireland 2.

1949-50 INTERNATIONALS

WORLD CUP PRELIMINARIES IN MEXICO CITY

The following players were selected by the International Players Selection Committee of the U.S.S.F.A. to represent the United States in the North American Zone Championship and the Jules Rimet (World) Cup preliminary matches played in Mexico City commencing September 4th, 1949..

Of the three nations, United States, Cuba and Mexico, engaging in the zone championship, two winners qualified as zone champions and were entitled to representation in the World Cup Competition which was played in Rio de Janeiro, Brazil, June-July 1950.

Player	Club	Position
Joseph M. Silovsky	Sparta F.C. Chicago	Goalkeeper
Frank Borghi	Simpkins F. C. St. Louis	Goalkeeper
Manuel Martin	Ponta Delgada F.C. Fall River	Full Back
William Bello	Lusitano S.C. Ludlow, Mass.	Full Back
Benjamin Watman	Hakoah A.C. New York	Full Back
William Sheppell	Seton Hall College, N.J.	Half Back
Charles Columbo	Simpkins F.C. St. Louis	Half Back
Walter Bahr	Philadelphia Nationals, Pa.	Half Back
Harry Keough	Schulte F.C. St. Louis	Half Back
Bernard McLaughin	Philadelphia Nationals, Pa.	Forward
John Souza	Ponta Delgada F.C. Rall River	Forward
Antone Almeida	Ponta Delgada F.C. Rall River	Forward
Nicholas DiOrio	Morgan S.C. Pa.	Forward
Frank Wallace	Simpkins F.C. St. Louis	Forward
Jack Hynes	New York Americans, N. Y.	Forward
Peter Matevich	Slovak A.C. Chicago	Forward
William Lyons	St. Louis, Mo.	Trainer

OFFICIALS. Walter J. Giesler, St. Louis, Mo.; Fred W. Netto, Chicago, Ill.; Joseph J. Barriskill, U.S.S.F.A. Secretary, New York, N. Y. Referee, Prudencio Garcia, St. Louis, Mo.

Dr. Randolph Manning, chairman of the U.S.S.F.A. Foreign Relations

Society for American Soccer History

Committee, was also in attendance as the representative of the Federation Internationale de Football Association.

GAMES

September	4	United States	0	Mexico	6
	14	United States	1	Cuba	1
	18	United States	2	Mexico	6
	21	United States	5	Cuba	2

AGAINST MEXICO—*Bahr, *Borghi, *Colombo, *Hynes, †Keough, *Martin, ‡Matevich, *McLaughlin, *W. Sheppell, *J. Souza, *Wallace, *Watman. Goals: †Souza, †Watman.

* Both games; ‡ 1st game; † 2nd game.

AGAINST CUBA—*Bahr, *Borghi, *Colombo, *Hynes, *Keough, *Martin, *Matevich, *McLaughlin, *W. Sheppell, *J. Souza, *Wallace. Goals: ‡Wallace, †Wallace, †Matevich 2, †Souza, ‡Bahr.

* Both games; ‡ 1st game; † 2nd game.

THE UNITED STATES SOCCER FOOTBALL ASSN.

320 Fifth Avenue, New York 1, New York

Instituted at N.Y.C. April 5, 1913

Organized pursuant to Membership Corporation Law, State of New York

Cable Address	Executive Secretary	Telephone
Soccer, New York	**Joseph J. Barriskill**	LOngacre 5-4158

Colors: White shirt with red trimmings, blue trousers, red stockings

Affiliated with:

Federation Internationale de Football Association
Amateur Athletic Union of the United States
American Olympic Committee

34th annual meeting, La Salle Hotel, Chicago, June 29-30, 1950.

President: Fred W. Netto, 7236 S. Francisco Ave., Chicago, Ill.
1st Vcie-President: James McGuire, 554-55th St., Brooklyn 20, N.Y.
2nd Vice President: Edwarl Sullivan, 457 N. Edgewood St., Phila. 31, Pa.
3rd Vice President: J. E. Ringsdorf, 2764 Pelham Ave., Baltimore 13, Md.
Treasurer, Wilson T. Hobson, Philadelphia Cricket Club, Phila., 18, Pa.
Life Member, Thomas W. Cahill, 163 Garfield Place, South Orange, N.J.

THE NEW NATIONAL COMMISSION

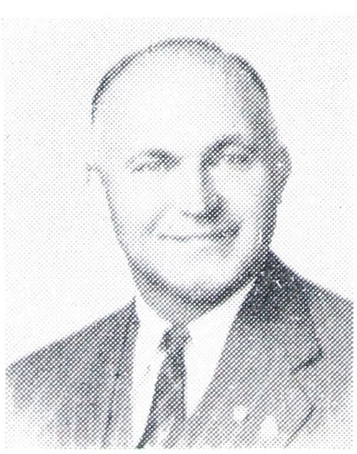

FRED W. NETTO, Chicago, President—Played in high school. While studying law only recreation was Sunday games with Chicago S. C., Kickers and Olympia as center halfback and inside right. Passed bar examination in 1931 and ceased playing. Returned in 1940 as an administrator and elected secretary to Illinois Commission a position which he still holds. Elected third vice president U.S.S.F.A. in 1945. In 1948 skipped next upper slot and became first vice president. Represented U.S.S.F.A. at 1948 Olympic Games in London, 1949 North American Zone championships in Mexico City and 1950 World Cup in Rio de Janeiro.

Society for American Soccer History



JAMES P. McGUIRE, Brooklyn, First Vice President—Scottish schoolboy international. Played one year with Bay Ridge of Brooklyn. At 17 graduated to Brooklyn Wanderers in the club's heyday under Nat Ager. During 1931 tour of Glasgow Celtic signed with Scottish Club. Played two years in Glasgow and next five as captain of Northampton of English League. Returned here and captained St. Mary's Celtic to U. S. Open championship. Later became player-manager and continued as such when franchise was sold to resurrected Brooklyn Wanderers. Captained U. S. and American League teams against Scottish National team in 1939 and also many other all-star combinations. Has held presidency of American League continously since 1946. Elected second vice president in 1948.

EDWARD SULLIVAN, Philadelphia, Second Vice President—Started playing at 12 with the Dunkirk F. C. and continued with the Angora and Stewart Clubs. Organized the Philadelphia National League and became its president. Was delegate to the Eastern District F. A. and later became its president. Following the outbreak of war took over the duties of other officials inducted into the armed services. Although in his 40's is still willing to take active field part in the playing of benefit games. Is secretary of the State Association and is U.S.S.F.A. Commissioner for all National Cups. First joined the National executive as third vice president in 1948.

GENE RINGSDORF, Baltimore, Third Vice President—Started playing at 14 and continued for 20 years. Later with Collington, Red Man, Locust Point, Ciifton Park, German S. C. (later Baltimore Americans), then Corinthians. Manager of latter when Stewart Cup was won in 1937. Delegate to Maryland State S. A. in 1936 and six years later became president. Has held secretary-treasuryship since 1944. Has been Maryland Commissioner for all National Cups since 1943. In 1947 appointed to committee to confer with National Federation of State High Schools A. A. which represents 18,000 U. S. high schools. Was defeated for present office in 1948 but at 1950 conclave in Chicago won over other aspirants.



WILSON T. HOBSON, Jr., Philadelphia, Treasurer—First played at University of Pennsylvania under Douglas Stewart and Davy Gould. Played with Penn 1923 championship team as halfback and in Philadelphia Cricket Clubs Soccer League from 1924 till 1943. On active service as Lieutenant Commander in Navy for four and one half years. Played on U. S. Olympic field hockey teams in 1932 in Los Angeles and 1936 in Berlin. Was third vice president of U.S.S.F.A. from 1941 till 1945 then switched to treasurer. Treasurer of F. A. of Eastern Penn for ten years before entering service. Secretary-treasurer of Middle Atlantic Intercollegiate League from 1936 till it dissolved in 1948. Still acts as chairman of soccer and tennis and also on board of governors of Philadelphia Cricket Club.

Society for American Soccer History



JOSEPH J. BARRISKILL, New York, Secretary—First played with Bensonhurst in Field League. Then played and later managed successful Crescent Club in Brooklyn. As Field League delegate attended New York S. A. Then became State delegate to U.S.S.F.A. Was elected first vice president of parent body in 1932 and from 1934 served two-year term as president.. Was chairman of National Challenge Cup Committees from 1928 till 1940. Treasurer of the New York S. A., with the exception of three years, from the reorganization in 1928 till 1948. Acted as executive secretary of U.S.S.F.A. since 1944 without pay and has pulled association from near bankrupcy until now bankroll is counted in tens of thousands of dollars. At 1950 conference was offered three-year contract to continue. Was champion bicycle long distance racer in his native Northern Ireland.

COMMISSIONERS—National Challenge, Amateur and Junior Cups

CONNECTICUT	ca	Bertil Larson, 119 Stoddart Ave., Newington
	j	John Hudson, 45 Center St., Norwalk
ILLINOIS	ca	Abe Korsower, 426 Belmont Ave., Chicago
	j	H. Sacklove, 3342 W. Polk St., Chicago
MARYLAND	*	Gene Ringsdorf, 2764 Pelham, Baltimore 13
MASS. N.	ca	Thos. Doherty, 33 Kingman Rd., Dorchester
	j	Sam Foulds, 86 Whiten Ave., Revere, Mass.
MICHIGAN	c	John Miller, 4262 W. Fort Ave., Detroit
	aj	J. MacEwen, 861 Beaconsfield, Grosse Pointe Pk., 30
MISSOURI	cj	Wm.Lyons, 2528a W. Sullivan Ave., St. Louis
	a	A. Weiss, 5351a Gladstone Ave., St. Louis
NEW ENGLAND S.	ca	Vincent Costa, 96 Canonious St., Fall River
	j	W. J. Braidwood, 149 Allord St., New Bedford
NEW JERSEY	ca	Ed Crowell, 16 Franklin Ave., Harrison
	j	Jos. Donohue, 902 Harrison Gds, Harrison
NEW YORK N. W.	ca	Bruce Donald, 15 Gladstone Ave., Rochester
	j	Willi Gabler, 398 Hamilton Blvd, Kenmore
	j	Bruno Bayh, 90 Andrews Ave., Buffalo.
NEW YORK S.	c	J. J. Barriskill, 320 Fifth Ave., New York 1
	a	R. MacInnes, 202 E. 46th St., N. Y.
OHIO	ca	Emil Klauss, 15019 Saranac Rd., Cleveland
PENN. E.	*	Ed Sullivan, 457 Edgewood St., Philadelphia
PENN. W.	c	R. Craddock, 5265 Wickliffe St., Pittsburgh
	aj	J. F. Paige, Box 378 Washington, Pa.
WASHINGTON	j	Barney Kempton, 328 2nd Ave., Seattle.
WISCONSIN	ca	Frank Beleznay, 1709 N. 33rd St., Milwaukee

* All Cups, c Challenge, a Amateur, j Junior

* * * *

What is believed to be a record in goal scoring was performed by Jim Easton when playing for the Innisfails in St. Louis in 1912. He is credited with racking up ten goals against the O'Learys in a Mound City championship game.

Society for American Soccer History

SECRETARIES AFFILIATED ASSOCIATIONS AND LEAGUES

American Soccer League
F. J. Jenkinson, 90 Belmohr St., Belleville 9, N.J.

California Football Association
Maurice Hudson, 248 Pacific Bldg., San Francisco, Calif.

Connecticut Soccer Commission
Richard Davenport, Brook St., Union City, Conn.

Football Association East Penn and District
Edward Sullivan 457 N. Edgewood St., Philadelphia 31, Pa.

Illinois Soccer Commission
Fred W. Netto, 7236 S. Francisco Ave., Chicago Ill.

Maryland State & District of Columbia Soccer Association
Thomas Connelly, 32 Linganore Ave., Baltimor, Md.

Michigan State Soccer Commission
John J. MacEwan, 861 Beaconsfield Ave., Grosse Point Park 30, Mich.

Missouri State Soccer Commission
Thomas Brennan, 3824 St. Louis Ave., St. Louis, Mo.

New Jersey State Football Assn.
Edward Crowell, 16 Franklin Ave., Harrison, New Jersey.

New York State Soccer Football Association
Robert MacInnes, 202 E 46th St., New York, N.Y.

New York (N.W.) State F.A.
Richard G. Warner, 642 E 6th St., Jamestown, N.Y.

Northern Mass. & New Hampshire State Soccer Football Association
Thomas S. Doherty, 33 Kingman Rd., Dorchester, Mass.

Ohio State Football Association
Emil Klauss, 15019 Saranac Road, Cleveland, Ohio

Oregon State Soccer Football Assn.
H. McGuckin, 4317 N. Gantenbein Ave., Portland, Ore.

Southern California State Football Association
T. M. Spence, 1620 Victoria Ave., Los Angeles 6, Calif.

Southern New England Football Association
William Morrissette, 609 Eastern Ave., Fall River, Mass.

Texas (Dallas Soccer Association
A. Ramsden, 2624 Hood St., Dallas, Texas

Washington State Football Assn.
A. V. Weston, 4803 Donovan Street, Seattle, Wash.

Western Penn Soccer Association
H. H. Fairfield, Pittsburgh Press, Pittsburgh, Pa.

Wisconsin Soccer Commission
Joseph W. Kelly, 1720 North 37th St., Milwaukee, Wis.

ASSOCIATE MEMBERS

Amateur Athletic Union
Daniel J. Ferris, 233 Broadway, New York, N.Y.

Intercollegiate Soccer Football Association of America
Lawrence E. Briggs, Univ. of Mass., Amherst, Mass.

National Collegiate Athletic Assn.
Kenneth L. Wilson, Hotel Sherman, Chicago, Ill.

Public Schools Association
Rowland Patterson, 110 Livingston St., Brooklyn, N.Y.

National Soccer Coaches Association of America
Glenn F. H. Warner, Athletic Ass'n. U.S. Naval Academy, Annapolis, Maryland.

Society for American Soccer History

NATIONAL CHALLENGE CUP

A solid silver trophy, with suitable engravings, emblematical of a soccer football, with a player mounted on top and surmounted on a pedestal formed by four Corinthian pillars, standing, in all, thirty-three inches high. It was manufactured by Read and Barton of New York City and is often exhibited as an outstanding example of the silversmith's art. The trophy is competed for annually as the National Challenge Cup, is emblematic of United States Open championship and is held by the winning team for one year under $2,000 bond to assure its safe and undamaged return.

The competition is open to all professional and amateur teams in the United States.

In season 1912-13, the trophy having been presented to the American Amateur Foot Ball Association, was offered for amateur competition only and was won by the Yonkers F.C., which defeated the Hollywood Inn F.C. of Yonkers 3-0 at Lennox Oval in New York City.

On formation of the United States Foot Ball Association in 1913, the trophy, with permission of the donor, became the property of the new organization and was offered in competition as the National Challenge Cup.

1949-50 COMPETITION

Excellent playing weather allowed the competition to travel at a fast clip and by May 7 the silverware had returned to the West in possession of Simpkins F.C. of St. Louis, which ousted the defending champion, Morgan S.C. of West Penn, in the Western final. The competition started with 113 entries, an increase of eight over the pervious season. Of these 57 were Western teams and 56 Eastern combinations. Since the start of the plays in 1913-14 the trophy has been won 25 times by Eastern teams, 10 by Western teams and once, in 1940, it was withheld when the finalists, Baltimore S.C. and Sparta, failed to reach an agreement after playing two tied games.

ENTRIES

CONN.	2	NEW JERSEY	13	OHIO	3
ILL.	9	NEW YORK S.	27	PENN. E.	7
MICH.	5	NEW YORK N.W.	6	PENN. W.	20
MO.	12	N. MASS. &		WISCONSIN	2
NEW ENGL S.	6	N. HAMPSHIRE	1		

NATIONAL FINAL

SIMPKINS, ST. LOUIS 3 (2-1); PONTA DELGADA, FALL RIVER (0-1).

1st game, St. Louis, April; 2nd game, Tiverton, R.I., May 7.

SIMPKINS—*Annis, *Barrale, **Bertani, *Borghi, *Colombo, *Desmuke, *Galimberti, *Lange, **Marshak, *McHugh, *Mugavero, *Pariani, *Randazzo, *Stier, *Wallace.

PONTA DELGADA—*Andrews, *Braga, *DeNardo, *Ferreira, **Francini, †Gianotti, *Kitchen, *Medeiros, *Millington, *Moniz, *Rego, *Ed Souza, *John Souza, *Travis.

Goals, Simpkins, **Pariani, ** Bertani, †Marshak. Ponta Delgada, †Ed Souza. Referees, **Eli Koner, Chicago; †Sam Galin, New York. Linesmen, **Henry Valina, **Jim Moore, †Tereira, †Amaral.

* Both games. ** First game only. † Second game only.

Society for American Soccer History

ENTRIES EASTERN DIVISION

CONNECTICUT—*Swedish A.C.; United Naugatuck S.C.; *State Champion.

NEW ENGLAND, SOUTH—Fairlawn Rovers, Fall River S.C.; New Bedford S.C.; *Ponta Delgada S.C.; Santo Chirsto S.C.; Washington S.C.; *State Champion.

NEW JERSEY—E. Trenton S.C.; Elizabeth S.C.; Extension Tavern S.C.; Gordon S.C.; Harrison S.C.; Irish American F.C.; *Kearny Scots F.C.; Maritimo Murtoense S.C.; McCann S.C.; Newark S.C.; Olden A.A.; Paterson Dover A.C.; Trenton American F.C.; *State Champion.

NEW YORK, SOUTH—Albany A.C.; Albany S.C.; Bliss United; *Brookhattan F.C.; Brooklyn S.C.; Brooklyn Hispano F.C.; Eintracht S.C.; French S.C.; German-American A.C.; German-Hungarian S.C.; Gjoa S.C.; Greek-American S.C.; Hakoah F.C.; Hota S.C.; Long Island Rangers; Minerva S.C.; New World; New Work American F.C.; New York Hungarian S.C.; Pfaelzer S.C.; Prague A.F.C.; Prospect Unity; Schenectady F.C.; New York S.C.; Swedish F.C.; Swiss F.C.; Yonkers American S.C.; *State Champion.

N. MASS. & NEW HAMPSHIRE—Lusitano S.C.

PENNSYLVANIA E—Delpark A.C.; Kensington Bluebell S.C.; Lighthouse Boys' S.C.; Philadelphia American F.C.; *Philadelphia Nationals F.C.; Thomas Celtic S.C.; Viola S.C.; *State Champion.

SEMI FINALS—Brookhattan 2, Ponta Delgada 4. Philadelphia Nationals advanced to Divisional Final from Third Round.

FINAL—Ponta Delgada 2-1; Philadelphia Nationals 1-1.

ENTRIES WESTERN DIVISION

ILLINOIS—*Chicago Eagles A.A.; Chicago Slovak A.A.; Hakoah Maccabee C.A.A.; L.S.S. Rangers; Maroons S.C.; Necaxa S.C.; Sparta A. & B.A.; Swedish-American A.A.; Viking A.A.; *State Champion.

MICHIGAN—Bavarian S.C.; Corinthian F.C.; Hungaria S.C.; S.C. 1924; *Toledo Turner S.C.; *State Champion.

MISSOURI—Carondelet S.M.C.; Delmonte Market S.C.; Fairmont Bus. Men's S.C.; Go-Getters S.C.; Jim McAteer S.C.; McMahon Pontiac S.C.; Mike Breheny's S.C.; Ray Dohle's S.C.; Russo's Nite Club S.C.; Santa Cruz K of C; *Simpkins Ford S.C.; Zenthoefer Furs S.C.; *State Champion.

NEW YORK, N.W.—*Beck's German S.C.; Italian-American S.C.; Lakesiders S.C.; Rochester S.C.; Rochester S.C. "B"; Thistles S.C.; *State Champion.

OHIO—Bartunek-Slavia S.C.; Greenhut Jewelers S.C.; *Heights Maennerchor S.C.; *State Champion.

PENNSYLVANIA W—Acme S.C.; Avella Polar S.C.; Beadling S.C.; Bishop S.C.; Canonsburg Moose S.C.; Castle Shannon A.C.; Cecil Allens S.C.; Curry S.C.; Dunlevy S.C.; Gallatin S.C.; Harmarville S.C.; Heidelberg Losego S.C.; Lincoln Hill S.C.; McConnell S.C.; Mississippi Glass S.C.; Mollenauer A.C.; Moon Run S.C.; *Morgan Capelli's S.C.; Muse Ind, S.C.; Slovene S.C.; *State Champion.

WISCONSIN—*Milwaukee Brewers; Richard Rich Tigers; *State Champion.

SEMI-FINALS—Morgan Capelli 2, McConnell 1; Simpkins 5, Chicago Eagles 0.

FINAL—Simpkins 4-2, Morgan Capelli 1-0.

Society for American Soccer History

WINNER AND RUNNER-UP

					At
1913-14	Bklyn. Field Club	2	Brooklyn Celtic	1	Pawtucket, R.I.
15	Bethlehem Steel	3	Brooklyn Celtic	1	S. Bethlehem, Pa.
16	Bethlehem Steel	1	Fall River Rovers	0	Pawtucket, R.I.
17	Fall River Rovers	1	Bethlehem Steel	0	Pawtucket, R.I.
18	Bethlehem Steel	2	Fall River Rovers	2	Pawtucket, R.I.
	Bethlehem Steel	3	Fall River Rovers	0	Harrison, N.J.
19	Bethlehem Steel	2	Paterson	0	Fall River, Mass.
20	Ben Millers	2	Fore River	1	St. Louis, Mo.
21	Robbins Dry Dock	4	Scullin Steel	2	Fall River, Mass.
22	Scullin Steel	3	Todd Shipyard	2	St. Louis, Mo.
23a	Patterson	2	Scullin Steel	2	St. Louis, Mo.
24	Fall River	4	Vesper Buick	2	Harrison, N.J.
25	Shawsheen	3	Canadian Club	0	Tiverton, R.I.
26	Bethlehem Steel	7	Ben Miller	2	Brooklyn, N.Y.
27	Fall River	7	Holley Carburetor	0	Detroit, Mich.
28	N. Y. Nationals	2	Bricklayers	2	New York, N.Y.
	N. Y. Nationals	3	Bricklayer	0	Chicago, Ill.
29b	Hakoah All-Stars	2	Madison Kennels	0	St. Louis, Mo.
	Hakoah All-Stars	3	Madison Kennels	0	Brooklyn, N.Y.
30	Fall River	7	Bruell Insurance	2	New York, N.Y.
	Fall River	2	Bruell Insurance	1	Cleveland, O.
31	Fall River	6	Bricklayers	2	New York, N.Y.
	Fall River	1	Bricklayers	1	Chicago, Ill.
32	New Bedford	3	Stix, Baer & Fuller	3	St. Louis, Mo.
	New Bedford	5	Stix, Baer & Fuller	2	St. Louis, Mo.
33	Stix, Baer & Fuller	1	N. Y. Americans	0	St. Louis, Mo.
	Stix, Baer & Fuller	2	N. Y. Americans	1	New York, N.Y.
34	Stix, Baer & Fuller	4	Pawtucket Rangers	2	St. Louis, Mo.
	Stix, Baer & Fuller	2	Pawtucket Rangers	3	Pawtucket, R.I.
	Stix, Baer & Fuller	5	Pawtucket Rangers	0	St. Louis, Mo.
35	Central Breweries	5	Pawtucket Rangers	2	St. Louis, Mo.
	Central Breweries	1	Pawtucket Rangers	1	Pawtucket, R.I.
	Central Breweries	1	Pawtucket Rangers	3	Newark, N.J.
36	Phila. Americans	2	St. Louis Sh'mr'cks	2	St. Louis, Mo.
	Phila. Americans	3	St. Souis Sh'mr'ocks	1	Philadelphia, Pa.
37	N.Y. Americans	0	St. Louis Sh'mr'cks	1	St. Louis, Mo.
	N. Y. Americans	4	St. Louis Sh'mrocks	2	New York, N.Y.
38	Sparta	3	St. Mary's Celtic	0	Chicago, Ill.
	Sparta	3	St. Mary's Celtic	2	New York, N.Y.
39	St. Mary's Celtic	1	Manhattan Beer	0	Chicago, Ill.
	St. Mary's Celtic	4	Manhattan Beer	1	New York, N.Y.
40c	Baltimore S.C.	0	Sparta	0	Baltimore, Md.
	Baltimore S.C.	2	Sparta	2	Chicago, Ill.
41	Pawtucket	4	Chrysler	2	Pawtucket, R.I.
	Pawtucket	4	Chrysler	3	Detroit, Mich.
42	Gallatin	2	Pawtucket	1	Pittsburgh, Pa.
	Gallatin	4	Pawtucket	2	Pawtucket, R.I.
43d	Brooklyn Hispano	2	Morgan Strasser	2	New York, N.Y.

Society for American Soccer History

1942-43d	Brooklyn Hispano	4	Morgan Strasser	2	New York, N.Y.
44d	Brooklyn Histpano	4	Morgan Strasser	0	New York, N.Y.
45	Brookhattan	4	Cleveland Americans	1	New York, N.Y.
	Brookhattan	2	Cleveland Americans	1	Cleveland, Ohio
46	Chicago Vikings	1	Ponta Delgada	1	Fall River, Mass.
	Chicago Vikings	2	Ponta Delgada	1	Chicago, Ill.
47	Ponta Delgada	6	Sparta	1	Fall River, Mass.
	Ponta Delgada	3	Sparta	2	Chicago, Ill.
48	Simpkins	3	Brookhattan	2	St. Louis, Mo.
49	Morgan	0	Philadelphia Nats	1	Philadelphia, Pa.
	Morgan	4	Philadelphia Nats	2	Pittsburgh, Pa.
50	Simpkins	2	Ponta Delgado	0	St. Louis, Mo.
	Simpkins	1	Ponta Delgado	1	Tiverton, R.I.

a Awarded to Paterson by forfeit.
b First year of deciding championship by two or three game series.
c Because of many difficulties encountered no deciding game was played.
d Single game besasi because of restricted travel in connection with war effort.

NATIONAL AMATEUR CUP

Entries for the National Challenge Cup had increased so rapidly that in season 1922-23 it was decided to organize the National Amateur Challenge Cup in order to permit the amateur player to earn National honors in his own right.

The trophy, competed for annually, is held by the winning team for one year under $500 bond to assure its safe and undamaged return. In the year of its inception, inclement weather prevented the competition being carried to a conclusion. In the East, Fleisher Yarn and Foxbury F. C. were the divisional finalists and in the West, Jeanette F. C. and the Swedish-American A.A. were the finalists.

1949-50 COMPETITION

The competition ended May 21 when Ponta Delgada S.C. of Fall River defeated Harmarville S.C. of Pittsburgh. The winner set a new record by winning the trophy five times in all, four of them within the past five years. No other club has won the silverware more than twice.

ENTRIES

CONN.	1	N. ENG. S.	8	OHIO	3
ILL.	11	N. J.	12	PENN. E.	15
MD.	7	N.Y. S.	27	PENN. W.	29
MICH.	6	N.Y. N.W.	7	TEXAS	2
MO.	8	N. MASS. & N.H.	2	WISC.	3

NATIONAL FINAL

PONTA DELGADA, FALL RIVER, 4 (0-4).
First game Tiverton, R.I. May 15.

HARMARVILLE, W. PENN. 1 (0-1).
Second game Bridgeville, Pa., May 22.

PONTA DELGADA — *Andrews, *Braga, *DeNardo, *Felix, *Ferreira,

Society for American Soccer History

*Francini, †Gianotti, *Kitchen, *Medeiros, *Moniz, *Rego, *Travis, *E. Souza, †J. Souza.

HARMARVILLE—*Barnable, *E. Bashor, *D. Bashor, *Buckley, *Cello, *DiOrio, *Grivnow, *Halasowski, *Lengle, ‡W. Macarovich, *A. Macarovich, *Prucnal, *Rubbles, *Yakopec.

Goals: Ponta, ‡E. Souza 3, ‡Travis. Harmarville, ‡D. Bashor. Referee: *Wm. Rose (Phila.). Linesmen: †Albert Leblond, †John Lima, ‡Adam Mucci, ‡S. Franjione. Managers: Ponta Mickey Travis, Harmarville, John Majack.

* Both games; † First game only; ‡ Second game only.

ENTRIES EASTERN DIVISION

CONNECTICUT—Swedish A.C.

MARYLAND—*Antlitz Seafood S.C.; Combined Taverns S.C.; Kelly Buick S.C.; Locust Point S.C.; Parkville Tavern S.C.; Pompei S.C.; Santa

NEW ENGLAND SOUTH—Fairlawn Rovers; Fall River S.C.; New Bedford S.C.; Park Cash S.C.; Peaches Cafe S.C.; *Ponta Delgada S.C.; Santa Christo S.C.; Washington F.C.

NEW JERSEY—E. Trenton S.C.; *Elizabeth S.C.; Extension Tavern S.C.; Gordon S.C.; Haledon Labor Lyceum; Harrison S.C.; Hungarian-American S.C.; Linden's S.C.; Maritimo Murtoense S.C.; McCann S.C.; Olden A.A.; Paterson Dovers A.C.

NEW YORK SOUTH—Albany A.C.; Albany S.C.; Armenian General A.U.; Bigelow-Sanford S.C.; Bliss United; Caribbean S.C.; Columbia S.C.; *Eintracht S.C.; French S.C.; German-American A.C.; German-Hungarian S.C.; Giuliana S.C.; Greek American S.C.; Kollsman S.C.; Long Island Rangers; Maccabi A.C.; Malta United F.C.; Minerva S.C.; New World; Pfaelzer S.C.; Prague A.F.C.; Prospect Unity; Schwaben S.C.; Segura F.C.; Swiss F.C.; Ukrainian S.C.; Yonkers American S.C.

N. MASS. & N. H.—*Lusitano S.C.; Pines Ramblers.

PENNSYLVANIA E.—Armenian Amvets S.C.; Cardington A.C.; Delpark A.C.; Geman-Hungarian S.C.; Juventus O.S.I.A.; Passon A.C.; Philadelphia Hummers A.A.; Philadelphia Hummers Res.; Kensington Bluebells; Kensington S.C.; Lighthouse Boys' S.C.; Phoenix S.C.; Richington A.A.; *Thomas Celtic S.C.; Viola S.C.

SEMI FINALS—Ponta Delgada 2, Thomas Celtic 1; Eintracht 4, Elizabeth 1.

FINAL—Eintracht 3-4; Ponta Delgada 4-5.

---

* State champion.

ENTRIES WESTERN DIVISION

ILLINOIS—Atlante S.C.; *Chicago Eagles A.A.; Chicago Slovaks A.A.; Hakoah Maccabee C.A.A.; Hansa S.C.; L.S.C. Rangers; Maroons S.C.; Necaxa S.C.; Schwaben Sparta A. & B.A.; Swedish-American A.A.; Viking A.A.

MICHIGAN—Bavarian S.C.; Corinthian F.C.; Hungaria S.C.; S.C. 1924; St. Clair S.C.; *Toledo Turners S.C.

MISSOURI—Carondelet S.M.C.; Delmonte Market S.C.; Go-Getters S.C.; Jim McAteer S.C.; Russo's Nite Club; Santa Crux K of C; Vincel Pontiac; * Zenthoefer Furs S.C.;

Society for American Soccer History

NEW YORK N.W.—*Beck's German S.C.; Italian-American S.C.; Swedish S.C.; Lakesiders S.C.; Rochester S.C.; Rochester S.C. "B"; Thistles S.C.;
OHIO N.—Bartunek Slavia S.C.; Heights Maennerchor S.C.; Spanish-American F.C.;
OHIO S.W.—Buckeye S.C.; Tillman Funiture
PENNSYLVANIA W.—Acme S.C.; Arden Scott Motor S.C.; Avella Polar Star S.C.; Beadling S.C.; Bishop S.C.; Canonsburg Moose S.C.; Castle Shannon S.C.; Cecil Allens S.C.; Curry S.C.; Dunlevy S.C.; Fritz Henry S.C.; Gallatin S.C.; *Harmarville S.C.; Heidelberg Losege S.C.; Horning S.C.; Keystone Shaft S.C.; Lincoln Hill S.C.; Lowber S.C.; McConnell S.C.; Mississippi Glass S.C.; Moon Run S.C.; Mollenauer A.C.; Morgan Capelli S.C.; Muse Ind S.C.; Rillton A.C.; Russellton S.C.; Slovene S.C.; Sturgeon F.B.C.; Van Voorhis S.C.
TEXAS—Bill Elder's S.C.; *Mulhauser S.C.;
WISCONSIN—Milwaukee Brewers, Richard Rich Tigers, Sheboyan S.C.
SEMI FINALS—Hamarville 2, Castle Shannon 0; Chicago Eagles 1, Zenthoefer Furs 2.
FINAL—Harmarville 2, Zenthoefer Furs 0.

---

* State champion.

NUMBER OF ENTRIES

1922-23	69	33	92	1942-43	41
24	81	34	93	44	43
25	64	35	133	45	60
26	75	36	129	46	83
27	53	37	112	47	175
28	69	38	126	48	166
29	75	39	117	49	144
30	113	40	93	50	142
31	73	41	99		
32	91	42	90		

WINNER AND RUNNER UP

					At—
1923-24	Fleisher Yarn	3	Swedish-Americans	0	Chicago, Ill.
25	Toledo	3	McLeod Council	1	Cleveland, Ohio
26	Defenders	1	Heidelberg	0	Clevelond, Ohio
27	Heidelberg	3	LaFlamme Cobblers	0	Pittsburgh, Pa.
28a	Swedish-Americans	-	Powers Hudson Essex	-	
29	Heidelberg	9	1st German S.C.	0	Newark, N. J.
30b	Raffies	3	Gallatin	3	Pittsburgh, Pa.
31	Goodyear	1	Black Cats	1	N. Bedford, Mass.
	Goodyear	2	Black Cats	0	Akron, Ohio
32	Cleveland Shamrock	2	Santo Christo	1	Cleveland, Ohio
33	German-American	5	McKnight Beverage	1	Philadelphia, Pa.
34	German-American	2	Heidelberg	1	Philadelphia, Pa.
35	W. W. Riehl	3	All-American Cafe	0	Pittburgs, Pa.
36	Brooklyn S.C.	2	Castle Shannon	1	Brooklyn, N.Y.
37	Trenton Highlander	1	Castle Shannon	0	Pittsburgh, Pa.
38	Ponta Delgada	2	Heidelberg	0	Fall River, Mass.

Society for American Soccer History

39	St. Michaels	3	Gallatin	1 Fall River, Mass.
40	Morgan Strasser	1	Firestone	0 No. Tiverton, Mass
41	Fall River	2	Chrysler	1 Fall River, Mass.
42	Fall River	4	Morgan U.S.C.O.	3 Fall River, Mass.
43	Morgan Strasser	4	Santa Maria	1 Baltimore, Md.
44	Eintracht	5	Morgan Strasser	2 N. York City, N.Y.
45	Eintracht	1	Rafterys	0 N. York City, N.Y.
46	Ponta Delgada	5	Castle Shannon	2 Fall River, Mass.
47	Ponta Delgada	10	Carondelets	1 Fall River, Mass.
48	Ponta Delgada	4	Curry Vets	1 Fall River, Mass.
49	Elizabeth	6	Zenthoefer	1 Astoria, New York
50	Ponta Delgada	0	Harmarville	0 Tiverton, R.I.
	Ponta Delgada	4	Harmarville	1 Pittsburgh, Pa.

a. Game not played. Inability to secure suitable ground.

b. Awarded to Raffies. Gallatin failure to complete arrangements for replay.

NATIONAL JUNIOR CHALLENGE CUP—Thos. W. Cahill Trophy
GRAND FINAL

May 28 Harrison (N. J.) B. C. 1 4c Seco (Mo.) B. C. 1 1 cPlayed in N. J.

WINNER AND RUNNER-UP

1934-35	Reliable Stores, New Bedford	W. of Scotland, Brooklyn, N.Y.
36	Hatkivoh F.C., Brooklyn, N.Y.	Bethlehem Midgets
37	Hatkivoh F.C., Brooklyn, N.Y.	Belloise F.C., Pittsburgh
38	Lighthouse, Philadelphia	Beadling F.C., Pittsburgh
39	Avella F.C., W. Penn.	Apache F.C., Baltimore
40	Avella F.C., W. Penn.	Yorkville Ath., New York
41	Mercerville, Trenton	Kensington Rec., E. Penn.
	194-42 till 1943-44 no competition	
*45	Pompei, Baltimore	Hornets, Chicago
46	Schumacher, St. Louis	Prague A.C., New York
47	Heidelberg, Pa.	Baldwin Hill, Trenton
48	Lighthouse B.C., Philadelphia	Schumacher. St. Louis
49	Lighthouse B.C. Philadelphia	Windsor A.C., St. Louis
50	Harrison B.C. (N. J.)	Seco. B.C. (Mo.)

*Schumacher, winner but disqualified for use of illegible players. Pompei-Hornets, joint champions.

AMERICAN SOCCER LEAGUE—By Erwin Single

After Jimmy Mills' Philadelphia Nationals had captured their second straight American Soccer League championship and Erno Schwarcz's New York Americans had won their first Lewis Cup Competition, the American Socer League season in 1949-50 was again climaxed by the arrival of several topnotch foreign teams.

Twelve games by Manchester United and seven by Besiktas Istambul brought the number of American League sponsored foreign contests during the 1946-50 post-war period to an astonishing total of 80 games. Starting with Puentos Grandes and Liverpool in 1946 and continuing right through

Society for American Soccer History

to this year's Manchester and Turkish tours, the league has furnished the American soccer enthusiast with the most diversified and well rounded foreign tours program ever undertaken in the United States. In addition to the 80 games directly sponsored by the ASL, eight other matches and and numerous "dream games" involving such topnotch teams as Djurgarden of Stockholm, Kamraterna of Goteborg, Newcastle United, Jonkoping and the English F.A. All-Stars were also promoted in New York and New Jersey under the league's promotional guidance.

Last year, Belfast Celtics' defeat of the Scottish Internationals provided the most startling upset of all post-season exhibitions. This year, two near-upsets caused almost as much of a hulabaloo and certainly provided the Triborough Stadium fans with thrillers they will long remember. In their second game at New York, mighty Manchester United trailed an inspired Philadelphia-Kearny team until the final minute of play, before emerging with a 2-2 tie. A few Sundays later, the United States team—with four American League stalwarts in the starting lineup—gave an indication of what was ahead in Rio by holding the highly favored touring English All-Stars to a 1-0 score.

As had been the case in all previous tours, the spring 1950 international series again ran off without the slightest hitch and created nothing but good will, a fitting tribute to league president James Mc Guire and, particularly, to business manager Erno Schwarcz who again supervised every last detail in the planning and staging of this year's foreign tours schedule.

Thanks to some splendid help from the weatherman, the league season was completed as early as February 26. Philadelphia Nationals became the third club to win the championship for two straight years. The Nats piled up 25 points in 16 games, six more than the Irish-Americans of Kearny who finished in second place, one point ahead of the third place New York Americans.

The Lewis Cup was won by the New York Americans on a one-goal two-game margin over Philadelphia Nationals who held the trophy in 1949. The Americans also captured the Duffy Cup, the annual competition among clubs in the metropolitan New York area. All nine ASL teams participated in the National Challenge Cup Competition with Philadelphia Nationals advancing to the Eastern Finals where they were defeated by a one-goal margin in a home-and-home series with Ponta Delgades of Fall River.

The most sensational advance was made by Hakoah who climbed from ninth to fourth place during the league season, while Hispano dropped from third to eighth position and Brookhattan from fourth to ninth.

Brookhattan-Galicia's crack center forward, Joseph Gaetjens, won the league's scoring derby with a total of 18, goals one more than young Dick Roberts of Kearny Scots. Two members of the Nationals—Len Owen and Nick Kropfelder—finished in a third place tie with 15 goals. In the annual "most valuable poll" taken among rival ASL managers, the 1950 award went to Hispano's Joe Maca, who edged out the Nationals' Walter Bahr in this year's vote.

Five ASL players were chosen for the United States team which wrote world soccer history in Brazil. Hispano furnished Joe Macca, Brookhattan Joseph Gaetjens, and the Nationals provided Ed Mc Ilveney, Walt Bahr and Benny Mc Laughlin, although the latter had to withdraw for business

Society for American Soccer History

reasons. The U.S.S.F.A. selected Erno Schwarcz to coach the United States team, but the ASL business manager had to decline because of pressing business duties connected with the foreign tours. League president James Mc Guire was also offered the assignment but had only recently returned from a good will tour of Britain and could not accept this new responsibility.

At the annual meeting of the league, all officers were reelected. James Mc Guire is the newly re-elected president; Erno Schwarcz continues as business manager; Frank Jenkinson as secretary-treasurer; and Emil Schillinger, Tom Jerome, James Mills and Julius Alonso as vice-presidents.

Climaxing the foreign tours was the announcement that wing halfback Ed McIlveney had been purchased from Philadelphia Nationals by the touring Manchester United Club.

Secretary, Frank Jenkinson, 90 Belmohr St., Belleville, N.J., Belleville 2-4185.

Business Manager, Erno Schwarcz, 235 Mt. Hope Place, Bronx 58, N.Y. TR 8-8035.

Brookhattan—Sterling Oval.

Anthony Davidson, 43 Kearny Ave., Kearny, N.J. Kearny 2-4219.

Brooklyn Hispano—Hawthorne Field.

Duncan Othen, Rodoma Inc., 509 Madison Ave., N.Y. 22. Plaza 3-0479.

Hakoah, A. C.

Louis Greenblatt, 2980 Brighton 12th St., Brooklyn, N.Y. DE 2-3023

Kearny Americans—Washington Oval

John McCurley, 408 Belgrove Drive, Kearny, N.J. KE 2-9028.

Kearny Celtic—Washington Oval

Wm. Coyle, 95 Kearny Ave., Keanry, N.J. KE 2-9677.

New York Americans—Sterling Oval.

Erno Schwarcz, 235 Mount Hope Place, Bronx 58, N.Y. Tremont 8-8035.

Philadelphia Americans—Holmes Stadium.

Emil Schillinger, 5235 Montour St., Philadelphia 24, Pa. Delaware 6-1282.

Philadelphia Nationals—Holmes Stadium

James Mills, 67-12 Souder St., Phila., Pa. Pilgrim 2036.

Trenton Americans—Witzel Field.

L. MacCabe, 36 Livingston St., Trenton, N.J. Trenton 3-0232.

1949-50 STANDINGS

		Home					Away										
	P	W	L	T	F	A	W	L	T	F	A	W	L	T	'F	A	'P
Phila Nats	16	12	3	1	50	31	7	1	0	28	15	5	2	1	22	16	25
Irish-A's	16	8	5	3	37	32	4	3	1	16	12	4	2	2	21	20	19
N.Y.A's	16	6	4	6	31	27	3	2	3	21	19	3	2	3	10	8	18
Hakoah	16	7	7	2	31	35	5	2	1	19	14	2	5	1	12	21	16
Kearny Scots ..	16	4	5	7	36	35	3	2	3	20	16	1	3	4	16	19	1
Phila A's	14	4	5	5	27	31	2	2	3	16	17	2	3	2	11	14	13
Trenton A's	15	4	8	3	36	44	1	4	2	13	20	3	4	1	23	24	11
B'klyn Hisp. ...	14	3	6	5	26	32	1	3	3	10	13	2	3	2	16	19	11
B'hattan	15	3	8	4	31	38	2	4	2	17	19	1	4	2	14	19	10

Total games played 69. Goals scored 305. Average goals per game 4.42.

Society for American Soccer History

LEWIS CUP RESULTS

BROOKHATTAN — N.Y.A. 1-3, 3-2; B'klyn Hispano 0-1; Phila Nats 1-3; 5-9.
B'KLYN HISPANO—Hakoah 2-1, 5-1; Brookhattan 1-0; Phila. A's 1-6; 9-8.
HAKOAH — B'klyn Hispano 1-2; 1-5; Irish A's 4-2, 2-1; 8-10.
IRISH A's — Kearny Scots 2-1, 3-0; Hakoah 2-4, 1-2; 8-7.
KEARNY SCOTS — Irish A's 1-2, 0-3; Phila Nats 4-3; N.Y.A. 0-2; 5-10.
NEW YORK A's — Brookhattan 3-1, 2-3; Phila A's 1-0; Kearny Scots 2-0; 8-4.
PHILA A's — Phila Nats 1-5, 1-2; N.Y.A. 0-1; B'klyn Hispano 6-1; 8-9.
***PHILA NATS** — Phila A's — Phila A's 5-1, 2-1; Kearny Scots 3-4; Brookhattan 3-1; 13-7.

*Finalists — New York Americans, 2-2; Philadelphia Nationals 1-2.
Games played 16. Goals scored 64. Average goals per game 4.

LEAGUE HIGHEST GOAL SCORER'S

Joe Gaetjens, B'hattan	18	Nick Kropfelder, Phila. Nats.	15
Dick Roberts, K. Scots	17	Len Owen, Philadelphia Nats.	15

SOCCER NEWS MOST VALUABLE PLAYER AWARD

1944-45	Rozbora, Brookhattan	1947-48	O'Connell, B'klyn Wands.
46	McFaul, Baltimore Americans	49	O'Connell, N.Y.A.'s
47	Mervine, Phila. Americans	50	Maca, B'klyn Hispano

HIGHEST GOAL SCORERS

1933-34	Millard Lang, Cantons	34	1942-43	Sheppell, Kearny Celtic	12
35	Deal, Phila. German	11	44	Marshall, Wanderers	21
36	Rae, Newark German	28	45	Nanoski, Phila. Amer.	22
37	Ernst, Baltimore S.C.	25	46	Salcedo, Hispano	24
38	Salcedo, Hispano	17	47	Fisher, Wanderers	17
39	Patenaude, Passon Phil	24	48	Kropfelder, Balt. Amer.	19
40	Ernst, Baltimore S.C.	24	49	Villanon ,B'hattan	17
41	Salcedo, Hispano	29	50	Gaetjens, B'hattan	18
42	Nanoski, St. Mary's Celtic	20			

LEAGUE CHAMPIONS

1933-34	Kearny Irish F.C.	1942-43	Brooklyn Hispano F.C.
35	Phila. 1st German F.C.	44	Philadelphia Americans S.C.
36	New York Americans F.C.	45	Brookhattan F.C.
37	Kearny Scots A.C.	46	Baltimore Americans F.C.
38	Kearny Scots A.C.	47	Philadelphia Americans S.C.
39	Kearny Scots A.C.	48	Philadelphia Americans S.C.
40	Kearny Scots A.C.	49	Philadelphia Nationals
41	Kearny Scots A.C.	50	Philadelphia Nationals
42	Philadelphia Americans S.C.		

PAST PRESIDENTS AND SECRETARIES

	President	Secretary		President	Secretary
1933-34	William Low	Edward Duffy	38	James Kelly	Edward Duffy
35	William Low	Edward Duffy	39	James Kelly	Edward Duffy
36	William Low	Edward Duffy	40	Elmer Schroeder	Edward Duffy
37	Edward Duffy	Edward Duffy	41	Elmer Schroeder	Edward Duffy
			42	Elmer Schroeder	Edw. Duffy

Society for American Soccer History

President	Secretary
1943-44 Emil Schillinger	Ed. Duffy
44 Emil Schillinger	Edw. Duffy
45 Emil Schillinger	Edw. Duffy
46 James Kelly	Edw. Duffy
47 James McGuire	F. Jenkinson
48 James McGuire	F. Jenkinson
49 James McGuire	F. Jenkinson
50 James McGuire	F. Jenkinson
51 James McGuire	F. Jenkinson

LEWIS CUP CHAMPIONS

Winner	
1939-40 Kearny Scots A.C.	1945-46 Brooklyn Hispano F. C.
41 Philadelphia Americans S.C.	46 Brooklyn Hispano F.C.
42 Brookhattan F.C.	47 Baltimore Americans F.C.
43 Philadelphia Americans S.C.	48 Kearny Americans A.C.
44 Kearny Celtic F.C.	49 Philadelphia Nationals
	50 New York Americans

CALIFORNIA

SOUTHERN CALIFORNIA S.F.A.

SECRETARY—E. R. Stern, 4236 Los Feliz Blvd., Ios Angeles 27.
PRESIDENT—P. Jennings, 4108 11st Ave., Los Angeles.
V. PRESIDENT—E. M. Plambeck, 756 Coniston Rd., Pasadena 3.
TREASURER—T. M. Spence, 1620 Victoria Ave., Los Angeles 6.
DELEGATES—
J. D. Mares, 434 N. Lake St., Los Angeles 26.
E. Kahler, 2456 Cass Place, Huntington Park.
H. Reid,3533 55th Ave., Los Angeles.

METROPOLITAN S.L.

SECRETARY—T. M. Spence, 1620 Victoria Ave., Los Angeles. RE 3-8441.
PRESIDENT—D. Gross, 359 N. Orange Ave., Los Angeles
V. PRESIDENT—H. Liberman, 3263 Sawtelle Blvd., Los Angeles.

LEAGUE STANDINGS

1. Victoria A.C.; 2. Univ. of California L.A.; 3. Atlas A.C.; 4. Hungarian A.C.; 5. Maccabee A.C.; 6. Pasadena A.C.

LOS ANGELES S.L., by E. M. Plambeck, secretary

SECRETARY—E. M. Plambeck, 756 Coniston Rd., Pasadena 3. SY 8-1234.
CHAIRMAN—R. C. Donalson, 2311 Avon St., Los Angeles 26. OL 4431.
TREASURER—Robert Simpson, 4927 Elmwood Ave., Los Angeles. HI 5210.

CLUBS

HAKOAH—Ralph Craig, 755 N. Sweetzer Ave.
L.A.A.—C. O. Kozma, 6706 State St., Huntington Park.
L.A. SCOTS—A. Keir, 960 8th Place, Hermosa Beach.
MAGYARS—D. Duff, 1975 W. Washington Blvd.
PAN AMERICANS—Pat Jennings, 620 W. 9th St.
ST. STEPHEN—St. Lani, 3711 Wood St.
SAN PEDRO—Tony Morejon, 637 W. 4th St., San Pedro.
SWISS S.C.—W. Rechsteiner, 2036 Dracena Drive.
VICTORIA—E. Kahler, 2456 Cass Pl., Huntington Park.
VIKINGS—J. Bergstrom, 218 E 82nd St.

Society for American Soccer History

First Half

	P	W	L	T	P
Pan American	9	7	1	1	15
Scots	9	6	1	2	14
Azteca	9	4	3	2	10
Vikings	9	4	3	2	10
St. Stephen	9	4	3	2	10
Magyars	9	5	4	0	8
Victoria	9	3	4	2	8
Swiss	9	2	6	1	5
Hakoah	9	1	6	2	4
San Pedro	9	1	6	2	4

Second Half

	P	W	L	T	P
L.A. Scots	8	7	1	0	14
Pan American	8	6	1	1	13
Victoria	8	6	1	1	13
San Pedro	8	4	2	2	10
St. Stephen	8	4	3	1	9
Vikings	8	2	5	1	5
Azteca	7	1	5	1	3
*Hakoah	6	2	4	0	2
Magyars	5	1	4	0	2
*Swiss	7	0	6	1	1

* Fined two points for using ineligible players. Second half arbitrarily closed to allow time for playoffs.

PLAYOFFS

	P	W	L	T	F	A	P
L. A. SCOTS	3	2	0	1	11	8	5
PAN AMERICANS	3	0	2	1	8	11	1

S. CALIFORNIA STATE CUP—L. A. Scots 4, Victoria 3. City Cup—Magyars.

HIGH SCORERS—Carruthers 23; M. Castro 16; Alex Boisserie 15; J. Rodriques 15; J. Noguera 14; J. Zomar 12; Manuel Garcia 10; D. Anderson 10; H. Bonilla 10; J. Lillie 9.

Goalie last scored upon. Renato Holguin.

SAN FRANCISCO F. L. — By John F. Ardizzone, secretary

SECRETARY-TREAS.: John Ardizzone, 39 Ledyard St., JU 7-4369.
PRESIDENT: Matthew Boxer, 1401 Fillmore St., FI 6-0886.
VICE PRESIDENT: John Sneddon, 146 Shotwell St., MA 1-9694.
ATTORNEY: Ezio Paolino, 358 Naples St., JU 5-4765.

Another thrilling season ended with the Verdi Club winning the first division pennant. Pan America won the second division crown and with it promotion to the upper division replacing Mexico A.C. which finished in last place. San Francisco A.C. Juniors surprised by taking the Alliance Division title.

In the State Cup the Rovers Club was declared the titulist after winning the Northern final by defeating Vikings in two straight games. Officials of the C.F.A. gave it undisputed title when the Los Angeles teams, for the first time in the competition, did not compete.

Playing throughout the season on open fields all teams put on good exhibitions. Crowds averaged 3,500 weekly.

The City Supervisors are planning a new soccer stadium which will seat 10,000 and be ultra-modern. A campaign to raise funds was a huge success.

One of the highlights of the season was the John Young Day on May 21. A trophy was presented to him on his retirement as Soccer Commissioner of the Olympic Club. He spent more than 60 years in soccer as player, referee, coach and commissioner. His teams were always strong contenders for cups and pennants.

Society for American Soccer History

Under the direction of Reggie Renfrew a five-team league was formed, two years ago, by the Recreation Dept. in Sacramento. It proved to be a success. Broadway Gardens defeated Mexico Center in the playoff to take the championship by a lone point.

CLUBS

AMERICAN A.C.	C. Castro, 23 Woodward St., UN 1-5797. P. Korbus, 1311 Sixth Avenue, Lo 4-4100.
EL SALVADOR F.C.	Jose Montoya, 1075 Ellis St., Or 3-8605. Rigo Bolanos, 31 Ord St., HE 1-7389.
FRENCH A.C.	Albert Vignau, 1212 Tenth Ave., SE 1-5620. Lucien Macario, 143 Ninth Ave., SK 1-4383.
HAKOAH A.C.	Leo Seglin, 1355 Fulton St., WE 1-1010.
MALTESE-AMERICANS	T. Zammit, 2767A 21st St., AT 2-9188.
MERCURY	L. Silber, 2695 20th Ave., LO 6-8044.
MEXICO A.C.	J. Leal, 4393 17th St. M. Ceballos, 177 Capp St., UN 3-5630.
OLYMPIC CLUB	Ezio Paolino, 358 Naples St., JU 5-4765.
PAN AMERICAN	B. Maal, 1028A McAlister St.
PAN HELLENAS	Bill Sefer,1626 Quint St., MI 7-4400. Jim Rally, 162 Sweeney St., JU 5-1749.
ROVERS	T. Roberts, 4059 19th St., HE 1-6765. J. Squeri, 167 Hartford St., HE 1-1050.
SAN FRANCISCO	F. Bacigalupi, 267 Maynard St., DE 3-3137.
S.F. SCOTS	M. MacKay, 814 California St., EX 2-3844. P. Wilson 1164 O'Farrell St.
STOCKTON S.A.	F. M. Lucaccini, 26 No. San Joaquin, Stockton, Calif.
UNION ESPANOLA	Julio Rivera, 2138 47th Ave., SE 1-6602. Henry Plaja, 248 Mattorca Way, WA 1-1218.
VERDI	Fred Gambucci, 8 Marion Place, PR 5-0854.
VIKINGS	D. Zylker, 632 Sargent St., DE 3-5456. E. Feibusch, 726 Shields St., JU 5-8359.

FIRST DIVISION

	P	W	L	T	F	A	P
Verdi Club	14	9	3	2	43	24	20
Rovers Blub	14	7	3	4	37	28	18
Teutonia A.C.	14	7	3	4	35	26	18
Viking Club	14	7	4	3	34	18	17
Mercury A.C.	14	6	6	2	31	29	14
San Franuisco A.C.	14	4	7	3	22	30	11
Olympia Club	14	3	7	4	27	40	
Mexico	14	2	11	0	14	47	

LEADING GOAL SCORERS—A. Finlayson, Rovers, 15; H. Zylker, Vikings, 12; M. Pieretti, Verdi, 10; H. Kirner, Teutonia; E. Bernard, Verdi; K. Apaydin, Rovers, 9; T. Cordery, Rovers; C. Sousa, Verdi, 8; S. Negoesco, Olympic; V. Lucchesi, S.F.A.C., 7; P. Leitao, Mercury; L. Ugarte, Olympic, 6.

Society for American Soccer History

ALLIANCE DIVISION

	P	W	L	T	F	A	P
San Francisco A.C.	12	10	1	1	35	11	21
Mercury A.C.	12	8	2	2	32	15	18
Verdi Club	12	6	3	3	30	21	15
Teutonio A.C.	12	5	5	2	32	26	12
Rovers Club	12	4	6	2	16	20	10
Pan Hellenes	12	3	9	0	16	36	6
Pan America	12	0	10	2	7	39	2

SECOND DIVISION

	P	W	L	T	P		P	W	L	T	P
Pan American A.C.	14	12	1	1	25	Maltese-American	14	6	7	1	13
Unione Espanola	14	11	2	1	23	Norsemen	14	5	9	0	10
El Salvador	14	10	1	3	23	S.F. Scots	14	3	11	0	6
Hakoah A.C.	14	7	5	2	16	Assyrians	14	1	13	0	2

SACRAMENTO

First Round	P	W	L	T	P		P	W	L	T	P
						Second Round					
Mexico City	4	4	0	0	8	Broadway Gardens	7	5	1	1	11
Broadway Gardens	4	3	1	0	6	Mexico Center	7	5	1	1	11
Burgemeister	4	2	2	0	4	Burgemeister	7	4	2	1	9
Eales Pharmacy	4	1	3	0	2	Eales Pharmacy	7	1	4	2	4
Grass Valley	4	0	4	0	0	Grass Valley	7	0	6	1	1

CONNECTICUT

CONNECTICUT STATE S.F.A., by Dick Davenport
SECRETARY—Richard C. Davenport, Brook St., Union City.
PRESIDENT—Bertil A. Larson, 119 Stoddart Ave., Newington.
V. PRESIDENT—John Casteledine, Andrew Ferreira, Donald Thornton.
TREASURER—John Hudson.
LIFE MEMBER & COUNSELOR—Thomas Robinson

NATIONAL LEAGUE

SECRETARY—Paul S. Vasquez, 70 New Park Ave., Hartford.
PRESIDENT—Bertil A. Larson, 119 Stoddart Ave., Newington.
V. PRESIDENT—A. J. Casciano, 54 Arnoldale Rd., W. Hartford.
TREASURER—Andrew Ferreira 302 Garden St., Hartford

CLUBS

BRIDGEPORT SWEDISH—Bror Bjorling, 85 Knollwood Dr., Fairfield.
BLUE HILL TIGERS—John Roth, 94 Prospect St., Bloomfield.
CHICOPEE PORTUGESE—Louis Domingos, 19 Mary St., Aldenville, Mass.
GLASTONBURY—Andrew Hayden, 1096 Main St., S. Glastonbury.
GREMIO LUSITANOS—Anicet Ferreira, Box K, Ludlow, Mass.
HARTFORD PORTUGESE—Antero Viola, 56 Standish St., Hartford.
ITALO-AMERICANS—Frank Viola, 56 Standish St., Hartford
SCANDIA—Anders Anderson, 674 Prospect Ave., Hartford.
UNITED NAUGATUCK—Richard Davenport, Brook St., Union City.
WEST SPRINGFIELD—Frank Alessi, 41 Cora St., W. Springfield, Mass.
WETHERSFIELD—Leon Pratt, 615 Wolcott Hill Rd., Wethersfield.
STATE CUP—Chicopee Portugese 4-1; Bridgeport Swedish 1-0.

Society for American Soccer History

CONNECTICUT GROUNDS

BLOOMFIELD—High School Field.
FAIRFIELD—Pine Creek Field.
GLASTONBURY—High School
HARTFORD—Colt's Field
NAUGATUCK—Recreation Field.
W. HARTFORD—Stirling Park.
WETHERSFIELD—High School

ILLINOIS

By George E. Fishwick, Editor National Soccer News

COMMISSION—Joseph Triner, president; Fred W. Netto, secretary-treasurer; Irving Nussbaum, Hyman Sacklove, Meydell Elligsen, J. Soderlund, Trial Board; Jack Maher, Eli Korer, Frank Nowakowski, Referee Unit.

NATIONAL SOCCER LEAGUE OF CHICAGO



G. E. Fishwick

The 1949 season was highlighted by the undefeated records of the PAAC, champions of the Major Division, and the Swedish Americans, champions of the First Division. The PAAC, runners-up in the 1948 race, losing the title to the Vikings in a play-off game, made no mistake in '49 and topped their closest rivals, Sparta, by five points.

In the First Division the Swedes were conquerors in the South Bracket, and topped the Milwaukee Tigers of the North Section 2-0 in the final play-off for the First Division title. Both the Swedes and Milwaukee Tigers gained promotion to the Major Division, replacing the Maroons and Wisla who moved down.

The Paac Reserves also won the Major Reserve bracket for a "double killing", but had to defeat the Vikings Reserves 2-0 in a play-off.

Brightest spot in the Junior movement was the excellent showing of the Slovak "A" team, which won the Junior Division with an impressive nine straight wins, scoring 45 goals with 3 against. In the juvenile section, Hansa, with the addition of some European boys, won six straight after losing and drawing the first two games, to take the gold medals.

Elected for 1950, and their third successive season were, William Hemmings, president; Nels Dahlquist, Vice President, and George E. Fishwick, Secretary-Treasurer. The Chicago circuit opens its season in April and continues through to November, with a two month's law-off in July and August.

MAJOR DIVISION

	P	W	L	T	P
PAAC	14	11	0	3	25
Sparta	14	9	3	2	20
Hansa	14	8	4	2	18
Slovaks	14	8	5	1	17
Vikings	14	7	5	2	16
Schwaben	14	2	8	4	8
Maroons	14	2	11	1	5
Wisla	14	0	11	3	3

MAJOR RESERVE DIVISION

	P	W	L	T	P
*PAAC	14	11	2	1	23
Vikings	14	11	2	1	23
Sparta	14	10	3	1	21
Schwaben	14	8	5	1	17
Maroons	14	6	7	1	13
Hansa	14	4	9	1	9
Slovaks	14	2	12	0	4
Wisla	14	0	12	2	2

*Won playoff 2-0 after 1-1 overtime

Society for American Soccer History

FIRST DIVISION—SOUTH

	P	W	L	T	P
*Swed. Amer.	14	12	0	2	26
Hak. Center	14	9	3	2	20
Rangers	14	7	4	3	17
Joliet	14	8	5	1	17
Atlante	14	7	5	2	16
Davenport	14	5	8	1	11
Appolo	14	2	11	1	5
Coal City	14	0	14	0	0

*Won First Division playoff 2-0 in overtime play.

FIRST DIVISION RESERVE

	P	W	L	T	P
Necaxa	16	13	1	2	28
Hakoah Res.	16	11	1	4	26
Hakoah B	16	10	5	1	21
Tigers	16	8	7	1	17
Atlante	16	6	9	1	13
Schwaben B	16	5	8	3	13
Norw. Amer.	16	5	11	0	10
Rangers	16	4	11	1	9
Fichte	16	3	12	1	7

JUVENILE DIVISION

	P	W	L	T	P
Hansa	8	6	1	1	13
*Slovaks	8	5	3	0	10
Schwaben	8	4	2	2	10
Rangers	8	2	5	1	5
Vikings	8	0	6	2	2

*Winner second place playoff

FIRST DIVISION—NORTH

	P	W	L	T	P
Milw. Tigers	12	9	1	2	20
Norw. Amer.	12	9	2	1	19
Necaxa	12	7	3	2	16
Chgo. Tigers	12	5	6	1	11
Milw. Brew.	12	4	7	1	9
Fichte	12	1	7	4	6
Rockford	12	1	10	1	3

JUNIOR DIVISION

	P	W	L	T	P
Slovak A	9	9	0	0	18
Sparta	9	6	2	1	13
Hansa A	9	6	2	1	13
Slovak B	9	6	2	1	13
Tigers	9	5	2	2	12
Oak Park	9	3	4	2	8
Schwaben	9	3	5	1	7
A.A.A.A.	9	1	8	0	2
Hansa B	9	1	8	0	2
Rangers	9	1	8	0	2

INDOOR SOCCER

Chicago inaugurated the first full Indoor league schedule ever completed in the U. S. The season opened Sunday, January 1st, 1950, and continued for 13 consecutive weeks, with games being televised every Sunday for two and a half-hours over WBKB.

Twelve teams participated, with the Vikings winning the league race, losing only one, Hansa taking second place with an undefeated record. In a knock-out competition the Eagles won the trophy by defeating the Vikings in the finals.

The games were played on a field 60 yards long and 42 yards wide, with play-off boards. Teams were made up of seven-men with two subs and games were of twenty minutes duration, divided into periods of ten minutes each. The playing surface was a dirt floor, but gym shoes were only permitted.

Gino Gardassanich, by his sensational goal-tending won the Most Valuable Goal-keeper award by popular vote, and later gained a place on the United States World Cup Squad which travelled to Brazil.

	P	W	L	T	F	A	P
Vikings	11	9	1	1	29	9	19
Hansa	11	7	0	4	21	14	18
Eagles	11	5	3	3	27	13	13
Slovaks	11	4	2	5	15	12	13

Society for American Soccer History

	P	W	L	T	F	A	P
Maroons	11	5	3	3	10	20	13
Sparta	11	5	4	2	19	17	12
Tigers	11	4	4	3	11	13	11
Hakoah	11	2	5	4	14	14	8
Necaxa	11	3	6	2	15	20	8
Schwaben	11	2	6	3	10	20	7
Norse	11	2	8	1	11	26	5
Rangers	11	1	7	3	8	22	5



INDOOR COMMITTEE. Back Row, L. to R. — Herb Hawkinson, Wm. Hemmings, Dr. Julius Brant, Frank Kracher, Kurt Stark, Carl Berg. Middle — Nels Dahlquist, Abe Korsower, Joe Wagner, Thure Gustafson. Front — George Fishwick, Sam Fralick, Herbert Horn, Jim Niotis, Hans Janich, Jack Johnston. Fralick and Johnston are soccer reporters from the Chicago Herald-American and Tribune respectively. Geff Coombes, assistant general manager is not in picture.

MONTGOMERY MOST VALUABLE GOAL KEEPER VOTE

Gino Gardassanich—Slovaks	6843	Joe Silovsky—Sparta	76
John Mennella—Maroons	5733	Hans Ihlen—Norse	29
Bob Larson—Hansa	1524	Steve Wisnewski—Eagles	13
Frank Streng—Schwaben	1015	Nello Menoni-Nexaca	1
Bill Stein—Hakoah	624	Angel Dominguez—Nexaca	9
Nels Gaevert—Vikings	597	Zbigniew Mroz—Eagles	4
Dick Mayer—Tigers	332	Bill Benesch—Hansa	1
Peter Bonnema—Rangers	144	Morris Farkas—Hakoah	1
Irving Klodner—Sparta	93		

Society for American Soccer History

PEEL CUP, OLDEST U.S. SOCCER TROPHY

The Peter J. Peel Challenge Cup, now in its 41st year of consecutive competition is the oldest booting trophy in the United States. It was inaugurated as an annual series in 1908-09 and has since grown to enjoy an entry list which has often passed the century mark.

The original aim of the competition was to provide a benefit fund for players requiring medical aid, however, of recent years, the winner has been recognised as Illinois State champion as entries are limited to teams within the home State of the donor, Dr. Peel, who is a past president of the U.S.S.F.A. and the only surviving member of the original Cup commission.

The final of the 1949-50 competition matched two of Chicago's strongest combinations, the favored PAAC (now the Eagles) and the loop champions of 1948 and National Open champions of 1946, the Vikings.

Goals by Francis Quinn and George Ross gave Vikings a 2-0 lead after five minutes of play. The game then developed into a battle between the Viking defense and the PAAC forwards. Geff Coombes playing a stalwart game at center half for the winners withered every attack by All-American Adam Wolanin and company enabling the Vikings to register their fifth victory since first capturing the trophy in 1940.

The 1950-51 series will commence in the Fall with the Eagles, Sparta, Slovaks, Hansa, Maroons, Atlante, Lions and Necaxa as contestants. Vikings failed to qualify. The Maroons, Atlante and Lions, recent additions to the roster, are expected to give tough competition to the "old-timers". The Lions are composed of recently arrived D.P.'s from Ukrainia.

PEEL CUP WINNERS

1909 Campbell Rovers	1924 Bricklayers	1939 Sparta
10 Hyde Park Blues	25 Pullman	40 Vikings
11 Blue Island	26 Pullman	41 Vikings
12 Pullman	27 Coal City	42 Slovaks
13 Pullman	28 Sparta	43 Slovaks-Vikings
14 Pullman	29 Sparta	44 Vikings
15 Pullman	30 Sparta	45 Swedish-Amer.
16 Chicago-Amer.	31 Sparta	46 Sparta
17 Harvey	32 Sparta	47 Sparta
18 Joliet	33 Sparta	48 Sparta
19 Scottish-Amer.	34 Wieboldts	49 Vikings
20 Bricklayers	35 Harvey United	
21 Pullman	36 Maccabee A.C.	
22 Olympia	37 Sparta	
23 Pullman	38 Manhattans	

MARYLAND

MARYLAND & DISTRICT OF COLUMBIA—By Millard Lang

LEAGUE SECRETARIES

BALTIMORE MAJOR LEAGUE—Gil Scheurholz, 1116 Darley Ave., Baltimore 18.

BALTIMORE UNLIMITED LEAGUE—Fred Crosby, Commissioner, 1129 N. Calvert St., Baltimore 2.

Society for American Soccer History

EASTERN SHORE LEAGUE—J. Malcolm Bye, Denton, Md.
PEN-MAR LEAGUE—Lou Heverin, North East, Md.
WASHINGTON COUNTY LEAGUE—Melvin Kaplan, 117 Greenmount Ave., Hagerstown, Md.
WASHINGTON & SUBURBAN LEAGUE—R. A. MacFarlane, 1742 Lamont St. N.W., Washington, D.C.

Baltimore

In the Baltimore Major League, the fastest in the State, Pompei, with only one tie to mar a perfect record captured the loop pennant. The combination also won the State Open and amateur championships by defeating Antlitz 2-1 in the final of the Rowland Cup and sidetracking Martin Bakery 4-2 in the final of the Stewart Cup.

In a pre-season Eastern Italo-American tournament in Philadelphia which included New York and Washington teams, Pompei was crowned as champion.

The team was captained by the stalwart center halfback, Robert Inky Knorlein, winner of the Most Valuable Player Trophy and the attack was sparked by Larry Surock, leading marksman in the circuit, Henry Celozzi and Joe DiFonza.

Antlitz Seafood, as league runner-up won the Lou Smith Trophy. Honors in the Baltimore City League, operated by the Dept. of Recreation, were taken by Serra and also the cup plays. Conway Batchelors and Locust Point Rangers finished in that order behind the winner.

Washington Suburban League

Martin Bakery, winning both rounds of the competition, are the league champions. With a nucleas of players from England the team went on to the final of the Stewart Cup before bowing to Pompei.

Washington County League

The Washington County League ended in a mixup because of several protests lodged by the two teams, Hancock and Williamsport, involved in the championship race. Following league decisions and appeals to the State Association, Williamsport was declared the winner.

Pen Mar League

In the Northern part of the State, Elkton and Chesapeake City went right down to a wire finish before Chesapeake took the honors in the last game of the season. Then followed the annexing of the Association Trophy after defeating the Eastern Shore champion, Ridgely, in the semi final and Martin Bakery in the finals. Due to the lateness of the season Washingon County did not compete.

Eastern Shore League

Overcoming stiff opposition from Denton and Greensboro, Rigdely, won the area title.

Juniors & Juveniles

The Junior League was organized late in the season and did not complete its schedule before baseball intervened. In the State plays, Vernon Reese's Patterson team finished on top, but lost in the National Junior Cup inter-city plays to Philadelphia.

In the Juvenile League plays, Conway Batchelors became champions,

Society for American Soccer History

after winning the first round, losing the second to Pompei, but made a strong comeback to defeat Pompei in the playoff.

In the State Cup the decision was reversed as Pompei defeated Conway Batchelors for final honors.



THE CONWAY BACHELORS J. V. TEAM has just won the Baltimore Juvenile Championship for the second straight year. Here are the future senior stars. Kneeling L. to R. — Wm. Bloom, Johnny Swabline, Butch Howard, Bobby Collier, Mike Wojciehowski, Bobo Reisinger, Earl Ryer, and Billy Schonowski. Standing L. to R. — Karl Johnson, James Garner, Charlie Ridgeway, Ed Novak, Jerry Bloom, Elmer LeCompte, Billy Wagner, Mox Niemann, Kenny Ridgeway, Petey Leichling and David Schatt.

College

With strong pressure from Loyola and Towson Teachers, the University of Baltimore won the Mason-Dixon crown on the last day of play. With the best from the high schools beginning to matriculate at the University, Coach Carl Ermer promises that the Bees will field even stronger teams in the future.

High Schools

With strong opposition from Patterson and Poly, Mount St. Joseph won the Maryland Scholastic Association laurels. An upset win by Calvert Hall over Patterson when a league tie was imminent was enough to give Mount St. Joseph the title.

Battled all the way by Franklin, Dundalk again won the Baltimore County League

ALL SCHOLASTICS

FIRST TEAM—Bock, Calvert Hall; Miller, City; Matoska, Calvert Hall; Ellis, Patterson; Stacharowski, St. Joe; O'Conner, St. Joe; Goon, Patterson; Quigley, St. Joe; Ginaro, St. Joe; Klemmick, Poly; Pomroy, Poly; Trotta, Patterson.

SECOND TEAM—Vinnick, Edison; Clarke, St. Joe; Karwacki, Patterson; Funk, City; Dugan, Edison; Evans, Patterson; Lenhoff, Calvert Hall;

Society for American Soccer History

Tanner, Poly; Ellick, Patterson; Loizeaux, City; Blanco, St. Joe; Kearny, Edison; Hopkins, Patterson.

HONORABLE MENTION—Smith, Poly; Lottmacher, Park; Demski, St. Joe; Ellick, Patterson; Geisenbaffer, St. Joe; Jirsa, Poly; Siemer, Edison; Choinacki, Patterson; Corbin, City; Kreider, Calvert Hall; Campbell, St. Joe; Cripps, Poly; Hannas, City; Poole, Poly; Marshall, Calvert Hall; McNutly, Edison, Edison; Janski, Calvert Hall.

BALTIMORE MAJOR LEAGUE

	P	W	L	T	P
*Pompei	14	13	0	1	27
Antlitz Seafood	14	8	4	2	18
Locust Point	14	6	3	5	17
Combined Tavern	14	6	5	3	15
Parkville Tavern	14	4	6	4	12
Kelly Buick	14	4	8	2	10
Davis	14	3	10	1	7
Santa Maria	14	2	12	0	4

*Winner of both rounds

BALTIMORE CITY LEAGUE

	P	W	L	T	P
*Serra	15	13	0	2	28
Conway Batchelors	15	8	3	4	20
Locust Pt. Rangers	15	7	2	4	18
Pompei	14	8	5	1	17
Budacz	15	7	7	1	15
Midway	11	6	3	2	14
Italia	13	3	10	0	6
Parkville	13	1	9	3	5
Sport Club	11	0	10	1	1
Army Chemicals	5	0	5	0	0

*Winner of both rounds

WASHINGTON & SUBURBAN LEAGUE

	P	W	L	T	P
Martin Bakery	18	16	1	1	33
Charles County	18	13	3	2	28
Marlboro	18	12	4	2	26
Italia-American	18	9	4	5	23
Uncle Billies	18	8	5	5	21
Gaithersburg	18	4	12	2	10
Greek-American	18	5	13	0	10
Washington Fr.	18	3	15	0	6
Indian Head	18	0	17	1	1
P. Amer. (1st Rd.)	9	4	4	1	9
Md. S.C. (2nd Rd.)	9	5	1	3	13

MARYLAND SCHOLASTICS

	P	W	L	T	P
St. Joseph	6	5	0	1	11
Patterson	6	4	1	1	9
City	6	3	3	0	6
Poly	6	3	3	0	6
Calvert Hall	6	3	3	0	6
Edison	6	2	4	0	4
Park	6	0	6	0	0

MASSACHUSETTS-E

EASTERN MASS ALL-SCHOLASTIC TEAMS

FIRST TEAM—Robert Stillwell, Watertown; Joseph Cappella, Medford; A. Correira, New Bedford Voc; T. Walecka, New Bedford Voc; Andrew Knight, Revere; William Seitz, Medford; A. Caruso, Belmont; J. Soares, Diman Voc; Richard Hayes, Medford; J. Gonsalves, New Bedford Voc; Alfred Hoelzel, Boston Latin.

SECOND TEAM—Anthony Gaeta, Medford; Arthur Spaulding, Perley; J. White, Duxbury; Wm. Palmisano, Medford; C. Baroza, Diman Voc; J. Perry, New Bedford; A. Morris, New Bedford Voc; John Staul, Boston Latin; George Thurlow, West Newbury; Richard Knell, Watertown; Robert Lang, Medford.

HONORABLE MENTION—Fernandez, Fall River; Gronc and Dupuis Watertown; Estabrooks, Pickett, Armer, Wiseman, Revere; Rodenisner, Berry, West Newbury; Pleadwell, Perley.

Society for American Soccer History

MICHIGAN

By John J. MacEwen, Secretary



John J. MacEwen

SECRETARY—J. J. MacEwen, 861 Beaconsfield, Grosse Pointe Pk 30. VA 2-8527.
PRESIDENT—John Miller, 4262 West Fort, Detroit 9. TA 5-0513.
TREASURER—Emil Bierkle, 11535 Nottingham, Detroit 24. LA 7-3833.
ADVISOR—George Healey, 54 Manistique Ave., Detroit 15.

The Bavarian S.C., by virtue of its 12 wins, one loss and one tie, captured the city championship while Corinthians and Hungarians tied for runner-up. The Bavarians annexed double honors when they defeated Maccabee in the final round of Michigan State Cup. In the Junior Division St. Clair wrapped up the cup series while Sport Club 1924 won the East Side Midgets divisional trophy. In the West Side division Mercury Wings won the championship with Van Dyke School as runner-up. Due to the lateness of the season the City Midget championship has been postponed till later.

CLUBS AND SECRETARIES

SENIOR — First Division

Bavarians—Albert Benzing, 3351 Illinois St., Detroit 7.
Corinthians—Emily Michael, 1360 East Fort, Detroit 7.
Hispano—Avelino de la Fuente, 3928 Porter, Detroit 9.
Hungarian—Vincent Sabalausky, 5053 Ternes, Dearborn.
Maccabee—Herman Doiny, 3273 Richton, Detroit 6.
S.C. 1924—Werner Hamann, 24050 Lee Baker Dr., Detroit 19.
Toldi—Bert Becsi, 12625 Monica, Detroit 4.
Toledo Turner—Wm. Schmitz R7 Box 330 Toledo 12, Ohio.

Second Division

Bavarians B—Albert Benzing, 3351 Illinois, Detroit 7.
Corinthions B—Emily Michael, 1360 East Fort, Detroit 7.
Detroit Turners—Henry Warnken, 8731 East Jefferson 14.
Hispano—
Italian-American—Sam Matei, 20519 Veech, Detroit 34.
Jerry Leon—James Sarno, 427 Arden Place, Toledo 5, Ohio.
Macedonians—John Etcoff, 1591 Hilger, Detroit 14.
Maltese—Lewis Dimech, 844 Michigan, Detroit 26.
S.C. 1924—Walter Hamann, 24050 Lee Baker Dr., Detroit 19.
Toledo Bavarian—Paul Heiss, 350 Summer, Toledo, Ohio.
Toledo Turners B—Wm. Schmitz, R7 Box 330, Toledo 12, Ohio.

YOUTH COMMITTEE

SECRETARY—J. J. MacEwen, 861 Beaconsfield, Grosse Pointe Pk. 30.
PRESIDENT—Henry Buchner, 8351 Westfield Ave., Detroit 7.
V. PRESIDENT—Charles F. Abud, 1082 Lenox St., Detroit 15.
TREASURER—Al Tomlin, 6342 W. Lafayette, Detroit 8.

Society for American Soccer History

Junior Division

Arsenal—Charles F. Abud, 1082 Lenox, Detroit 15.
Birwood Cleaners—Douglas Lindsay, 1911 Clairmont, Detroit 6.
Boys' Club—Joe Koze, 3910 Livernois, Detroit 10.
Corinthians—Andy Anderson, 1450 Baldwin, Detroit 14.
Ford Motors—James Smith, 4096 Calhoun, Dearborn.
Geisz Rockets—Peter Geisz, 13306 Gratiot, Detroit 7.
Hayden Furniture—Wm. Stewart, 9716 Dundee, Detroit 4.
St. Clair—Tony Munoz, 19700 Rowe, Detroit 5.
S.C. 1924—Eric Kuessner, 14824 Lappin, Detroit 5.
Vikings—Albert Schulte, 14813 Springarden.

East Side Midgets

Charles Annex—Tom Walker, 8291 Asbury, Detroit 28.
Corinthians B—Tom Essa, 2498 Concord, Detroit 7.
Kickers—Peter Petroff, 4138 Fischer, Detroit 14.
Van Dyke—Peter Mercurio, 2499 Concord, Detroit 7.
Wolverines—Wm. Bies, 6829 Charlevoix, Detroit 7.

West Side Midgets

Boys Club—Joe Koze, 3910 Livernois, Detroit 10.
Cooley High—
Detroit—Charles F. Abud, 1082 Lenox, Detroit 15.
Ford Motor—Wm. Hyde, 6157 Coleman, Dearborn.
McCulloch School—Hugh Bohn, 3351 Glynn Court, Detroit 6.
Mercury Wings—Henry Ashton, 15098 Pinehurst, Detroit 21.
Olympics—Wm. Stewart, 9716 Dundee, Detroit 4.
Peters Sport Goods—Manuel Mackie, 4879 Joy Rd., Detroit 4.

MISSOURI

ST. LOUIS MUNICIPAL A. A.

By EARL C. GRASSER, Director Organized Athletics

SENIORS—SOUTH

	P	W	L	T	P
Zenthoefer	12	6	3	3	15
*McAteer	12	6	4	2	14
S.A.Y.	12	6	6	0	12
Carondelet	12	5	6	1	11
Vincel	12	3	7	2	8

SENIORS—NORTH

	P	W	L	T	P
Russo's	12	10	1	1	21
Dogtown	12	9	3	0	18
Kassly's	12	4	5	3	11
Santa Cruz	12	2	8	2	6
Go-Getters	12	2	10	0	4

*City champion. Playoffs, McAteer 2, Kasslys 0; Dogtown 2, S.A.Y. 1; Second Round, McAteer 4, Dussos 1; Zenthoefer 3, Dogtown 2. Finals, McAteer 3-1-4, Zenthoefer 1-2-3.

JUVENILE—SOUTH

	P	W	L	T	P
*1st District ...	12	12	0	0	24
3rd District	12	8	4	0	16
2nd District	12	4	8	0	8
7th District	12	0	12	0	0

*Playoff and league winner

JUVENILE—NORTH

	P	W	L	T	P
6th District	10	8	0	2	18
11th District ...	10	7	0	3	[illegible]
12 th District ...	10	5	4	1	[illegible]
5th District	10	4	5	1	9
Jack Diamond .	10	1	7	2	4
Walnut Park ...	10	0	9	1	1

Society for American Soccer History

JUNIOR DIVISION

	P	W	L	T	P
S.E.C.O.	10	8	1	1	17
Plaza	9	6	1	2	14
Simpkins	9	5	3	1	11
Craig Club	10	4	5	1	9
St. Leo's	10	2	8	0	4
District	10	1	8	1	3

[illegible]yoffs, S.E.C.O. 4, Craig 0; Simpkins 5, Plaza 0. Finals S.E.C.O. 4-1, Simpkins 3-0.

MIDGET DIVISION

	P	W	L	T	P
Carondelet No. 1	12	9	0	3	21
M'Manus Fred's	12	8	3	1	17
Ryan	11	3	6	2	8
Carondelet No. 2	11	0	11	0	0

PREVIOUS MUNICIPAL CHAMPIONS

1913 Aldines
14 St. Matthews
15 C. B. C.
16 Missouri A.C.
17 Keen-Kutters
18 Lennox
19 Trumbulls
20 St. Leos
21 Keen-Kutters
22 St. Leos
23 St. Matthews
24 Schumachers
25 St. Matthews
1925-26 Fairmount Dem.
27 Killarney Rose
28 Angelica Motors
29 S.S. Radio
30 Kolster Radio
31 Schenbergs
32 Macks S.C.
33 German S.C.
34 Doyles
35 Irish Village
36 El Reys
37 Stag Beer
38 Schumachers
1938-39 Schumachers
40 Natural Set-Up
41 Eddy Stokers
42 Raftery Egan
43 El Reys
44 El Reys
45 Rafterys
46 Rafterys
47 Correnti Clean'rs
48 Breheny Furn.
49 Spanish-Amer.
50 Spanish-Amer.

NEW JERSEY

NEW JERSEY STATE S.F.A.—By Edward R. Crowell

SECRETAY—Edward R. Crowell, 16 Franklin Ave., Harrison.
PRESIDENT—Walter H. Rush, 54 Washington St., Harrison.
VICE PRESIDENTS—
Frank Giodano, 12 Davis St., E. Newark.
Michael Warasky, 139 Sherman Ave., Trenton.
Paul Klein, 42 Dodd St., Bloomfield.
JR. COMMISSIONER—Herb Hotaling, 314½ Central Ave., E. Newark.
N. J. STATE CHALLENGE CUP FINAL—Paterson Dovers 5, Elizabeth 1.

NEW JERSEY STATE LEAGUE

SECRETARY—Walter H. Rush, 54 Washington Ave., Harrison.
PRESIDENT—Frank Giodano, 12 Davis St., E. Newark.
VICE PRESIDENT—Herb Hotaling, 314½ Central Ave., E. Newark.

420 CLUB ..... Thomas Billings, 420 Passaic Ave., E. Newark.
HARRISON PLEASURE CLUB Anthony Aquino, 15 Cleveland Ave., Harrison.
[illegible]RRISON S.C. ..... Steve Borkowski, 760 Harrison Ave., Harrison.
HALEDON S.C. ..... Harry Tilli, 114 N 13th St., Paterson.
McCANN ..... Edward Polding, 167 Grant Ave., E. Newark.
PATERSON INDEPENDENTS . Frank Frisby, 221 E 21st St., Paterson.

Society for American Soccer History

	P	W	L	T	P		P	W	L	T	P
Harrison S.C.	10	9	1	0	18	Paterson Ind.	10	2	7	1	5
McCann S.C.	10	7	2	1	15	Haledon S.C.	10	1	6	3	5
Harrison P.C.	10	6	4	0	12	420 S.C.	10	0	7	3	3

LEADING GOALSCORER—Dan Capozzi, McCann, 16 goals.
LEADING GOALKEEPER—Chet Polakard, Harrison S.C.

UNION COUNTY LEAGUE

SECRETARY—Williams Burns, 2139 Dill Ave., Linden.
PRESIDENT—Anthony Dias, 224 Second St., Elizabeth.
VICE PRESIDENT—Michael Hegedus, 21 Guilden St., New Brunswick.

CLUBS

ELIZABETH PORTUGUESE ..Joe Silvia, 428 Bond St., Elizabeth.
GORDON S.C. .....Williams Burns, 2139 Dill Ave., Linden.
HUNGARIAN-AMERICAN .....Michael Hegedus, 21 Guilden Ave., New Brunswick.
HUNGARIAN COLTS .....Alex Schonyay, 251 Somerset St., New Brunswich.
MARITIMO .....Joseph Malheiro, 104 Ferry St., Newark.
S.I. FAVORITES .....Joseph Tolas, 4158 Victory Blvd., Staten Island, N.Y.
SUMMIT S.C. .....John Lombardi, 32 Aubrey St., Summit.

	P	W	L	T	P		P	W	L	T	P
Maritimo	10	10	0	0	20	Hung. Colts	12	3	9	0	6
Hung.-American	12	8	3	1	17	Summit	12	3	8	2	6
S.I. Favorites	11	5	3	3	13	Gordon	12	2	8	2	6
Eliz. Portuguese	11	4	3	4	12						

LEADING GOALKEEPER—Joseph Malheiro, Maritimo S.C.

CAPITOL CITY LEAGUE

SECRETARY—Mrs. K. Riley, 720 State St., Trenton.
PRESIDENT—Michael Warasky, 139 Sherman Ave., Trenton.

CLUBS

CHAMBERSBURG .....S.R. Grallella, 722 Johnston Ave., Trenton.
EAST TRENTON .....Frank Cier, 137 Girard Ave., Trenton.
EXTENSION .....Edward Leszcynski, 1139 Indiana Ave., Trenton.
OLDEN .....Martin Haley, 333 Ellis Ave., Trenton.
LEAGUE CHAMPION—Olden A.A.

STATE JUNIOR LEAGUE

	P	W	L	T	P		P	W	L	T	P
Harrison S.C.	10	9	0	1	19	Kearny P.F.A.L.	10	5	4	1	11
*St. Anthony C.Y.O.	10	6	3	1	13	Clifton Colts	9	3	6	0	6
*Jerome Jrs.	10	6	3	1	13	Paterson Dovers	10	0	10	0	0

* Second place playoffs: St. Anthony C.Y.O.

HARRISON JUNIORS—Defeated Dick Kafes of Trenton to win N.J. championship Defeated Erden Jrs. of Philalelphia in Eastern semi-final National Jr. Cup. Defeated German-Hungarian Jrs. of Brooklyn in Eastern final National Jr. Cup. Defeated Seco Jrs. of St. Louis to become National champion.

Society for American Soccer History

NEW JERSEY GROUND LOCATIONS

BUCCLEUGH PARK—New Brunswick.
CLARK FIELD—Central & Passaic Aves., E. Newark.
EXTENSION FIELD—East Trenton.
FARCHERS GROVE—Springfield Road, Union.
HALEDON SHOOL FIELD
HETZEL PARK—East Trenton.
[illegible]ONBOUND FIELD—Behind Ruppert Stadium, Newark.
[illegible]EMORIAL PARK—Myrtle Ave., Summit.
MILLER STADIUM—Jackson Ave. & 57th St., West New York.
PULASKI PARK—Monroe St., Passaic.
REYNOLDS FIELD—William Stand Kingsland Ave., Harrison.
SANDY HILL FIELD—Graham & Market, Paterson
SAVOIA FIELD—Jackson and 5th Sts., Hoboken.
SCHUETZEN PARK—Hudson Blvd. & 32nd St., North Bergen.
WARINACO PARK—No. 5 Field, Elizabeth.
WASHINGTON OVAL—Woodland Ave. & Bellegrove Dr. Kearny.

NEW YORK

NEW YORK-NORTH WESTERN-STATE FOOTBALL ASSOCIATION

SECRETARY—Richard G. Warner, 642 East 6th St., Jamestown.
PRESIDENT—Bruce M. Donald, 15 Gladstone St., Rochester 11. GE 0146W.
VICE PRESIDENTS—
Albert Dorman, 226-8 Hempstead Ave., Buffalo 15.
Oscar Reber, 217 Nahant Rd., Rochester 12.
Wm. Ferron, 1 Sawyer St., Rochester 11.
TREASURER—Bruno Bayh, 90 Andrews Ave., Buffalo 11. BA 4234.

INTER-CITY LEAGUE — By Frank Schlemitz

SECRETARY—Rudy Conversi, 631 Emerson St., Rochester 13.
PRESIDENT—Bruce M. Donald, 15 Gladstone St., Rochester 11, GE 0146W.
V. PRESIDENT—Richard G. Warner, 642 E. Sixth St., Jamestown.
—Hans Freuhmorgan, 63 Fuller St., Buffalo 7.
—Frank Schlemitz, 24 Cooper Rd., Rochester 17, CH 1639R.
TREASURER—Dan Fowler, 232 Bakerdale Rd., Rochester 16, CH 0283W.

CLUBS

BUFFALO BECKS—Hans Freuhmorgan, 63 Fuller St., Buffalo 7.
ITAL-AMERICANS—Julius DiCesare, 50 Melrose St., Rochester 11.
JAMESTOWN VIKINGS—Richard Warner, 642 E. Sixth St., Jamestown.
LACKAWANNA HISPANO—A. W. Pietrowski, 34 Glenwood St., Lackawanna 18.
LAKESIDERS—Dan Fowler, 232 Bakerdale Road, Rochester 16.
ROCHESTER S.C.—Frank Schlemitz, 24 Cooper Road, Rochester 17.
[illegible]ISTLES—William Ferron, 1 Sawyer Street, Rochester 11.

	P	W	L	T	P		P	W	L	T	P
Thistles S.C.	12	8	2	2	18	Lackaw'na Hispano	12	4	7	1	9
Buffalo Becks	12	7	3	2	16	Jamestown Vikings	11	4	7	0	8
Italian American	11	6	4	1	13	Rochester S.C.	12	2	9	1	5
Lakesiders	12	5	4	3	13						

Society for American Soccer History

ROCHESTER & DISTRICT — Second Division — By AL MORT

SECRETARY—Frank Ruhl, 49 Orland Road, Rochester.
PRESIDENT—Albert L. Mort, 186 Pullman Avenue, Rochester.
V. PRESIDENT—Andrew Zubert, 260 Eastman Avenue, Rochester.
FINAL STANDING—1. Rochester Eagles; 2. Rochester S.C. Liga; 3. Charlotte S.C.; 4. Buffalo Genesee Park.

NORTHWESTERN NEW YORK GROUND LOCATIONS

ROCHESTER: AVENUE D PLAYGROUND, Avenue D; BRITTON AVE FIELD, Dewey Ave.; EDGERTON PARK PADDOCK; ROCHESTER S.C., 1001 Lexington Ave.; WEST HIGH FIELD, Arnett Blvd.
BUFFALO: GENESEE PARK, Genesee St.
JAMESTOWN: ALLEN PARK.
LACKAWANNA: 2040 HAMBURG TURNPIKE.

NEW YORK STATE (So.) SOCCER FOOTBALL ASSOCIATION

Annual meeting Hotel Statler, N. Y. C. Sept. 9, 1950

SECRETARY—Robert MacInnes, 202 E. 46th St., N. Y. MU. 7-0065
PRESIDENT—Carl Hansen, 12 Glenwolde Pk., Tarrytown. TA. 4-2495W
V. PRESIDENT—Ludolph Heidecker, 141 Nagle Ave., N. Y. 24, LO. 7-7523
Jos. Tolan, 2131-89 St., Jackson Heights, HA. 4-7208
Hans Chalfon, 1604 Jesup Ave., N. Y. 52. LU. 3-2337
TREASURER—Henry Uhlfelder, 910 Riverside Dr., N. Y. 32. LO. 8-5975
REC. SECY.—Ted Hartman 449 Chestnut St., Bklyn. AP. 7-1455
COMMISSIONER—Max Bergman, 250 Ft. Washington Ave., N. Y. 32. WA. 8-5666
Ernest Bruce 749 55th St., Bklyn. GE. 8-3536
Chas. Fink, 1221 30th Ave., Astoria 2. RA. 6-0028
Max Harnick, 1430 St. Marks Ave., Bklyn. SL. 6-8416
Harry Kraus, 1724 Hart St., Bklyn. HE. 3-4298
Felix Stevens, 5202 Haspel St., Elmhurst. IL. 8-6838

The treasurary reported a balance of $3,169 of which $1,130 came from touring foreign team gates and $755 from State Cup competitions. Herman Meyn, the Association registrar reported a registration of 3,665 players during the past season made up as follows:

Central N. Y.	261	Long Island	128
Eastern District	539	Metropolitan	484
Empire State	89	National	162
German-American	1144	N. Y. Junior Comp.	858

NEW YORK STATE CHALLENGE CUP

36 **Entries.** Albany A.C., Albany S.C., Armenian G.A.U., Bigelow Sanford, Bliss United, Bronx Jewish, Brooklyn S.C., College Point, Danish, Duanesberg, French, German-American, German-Hungarian, Giuliana, Gjoa, Greek-American, Hota, Kollsman, Maccabi, Malta United, Minerva, New World, N. Y. Hungarian, New York, Paterson Dover, Pfaelzer, Prague, Sada, Schenectady, Schenectady Rangers, Schwaben, Swedish, Troy, Ukrainian, Utica, Yonkers Americans.

SEMI-FINALS—Yonkers Americans 2, German-American 1; Paterson Dovers 5, Bigelow Sanford 2. **FINAL**—Paterson Dovers 2,2, Yonkers Americans 1-1.

Society for American Soccer History

DR. MANNING CHALLENGE CUP

30 **Entries.** Brooklyn Res, Carlisle Rovers, Columbia Res, Cork Celtic, Eintracht A, Eintracht Res, Flushing Heights, Fortitudo, Franklin Square, German-American Res, German-Hungarian Res, Great Neck, Hempstead, L. I. Rangers, Mineola, Minerva Res, Mola, Newark Res, New American, N. Y. Hungarian Res, New York Res, Pfaelzer Res, St. Benedict, Savoia, Schleiser, Schwaben Res, Swiss Res, Ukrainian Res, Warsaw, White Plains.

SEMI FINALS—L. I. Rangers 2, Flushing Heights 1; New York Reserves 5, Cork Celtic 2. **FINAL**—New York Reserves 2, Long Island Rangers 1.

NEW YORK STATE CHALLENGE CUP

1938-29 New York Giants F.C.
30 Hispano F.C.
31 Prague F.C.
32 Brooklyn S.C.
33 German-Hungarian F.C.
34 St. Mary's Celtic F.C.
35 St. Mary's Celtic F.C.
36 German-Hungarian F.C.
37 Gjoa S.C.
38 Danish A.C.
39 Hatikvoh S.C.

1939-40 German-Hungarian F.C.
41 German-Hungarian F.C.
42 German-American A.C.
43 Eintracht S.C.
44 German-Hungarian F.C.
45 Eintracht S.C.
46 Eintracht S.C.
47 New York S.C.
48 New York S.C.
49 New York S.C.
50 Paterson Dovers F.C.

NEW YORK STATE QUALIFYING CUP

1928-29 Crescent A.C.
30 Crescent A.C.
31 Lava F.C.
32 Dublin United F.C.
33 German-Hungarian F.C.
34 Manhattan F.C.
35 Belfast United F.C.

1935-36 Yonkers Rangers F.C.
37 Belfast United F.C.
38 Flatbush Wanderers F.C.
39 Belfast United F.C.
40 Segura F.C.
41 Prague B F.C.

DR. MANNING CHALLENGE CUP

1941-42 New York S.C.
43 Celtic Circle F.C.
44 No Competition
45 New York S.C.
46 Prague F.C.

1946-47 Segura F.C.
48 Schwaben F.C.
49 German-Hungarian Reserves
50 New York Reserves

NEW YORK STATE JUNIOR CHALLENGE CUP

1933-34 Flushing F.C.
35 W. of Scotland
36 Hatikvoh S.C.
37 Hatikvoh F.C.
38 Bay Ridge Hearts F.C.
39 Yorkville Athletic F.C.
40 Yorkville Athletic F.C.
41 Hatikvoh F.C.
42 Bay Ridge Hearts F.C.

1942-43 Maccabi F.C.
44 German-Hungarian F.C.
45 Cork Celtic F.C.
46 Bronx Scots F.C.
47 Bronx Scots F.C.
48 Kollsman F.C.
49 German-American S.C.
50 New York S.C.

Society for American Soccer History

NEW YORK STATE BOYS' CHALLENGE CUP

1946-47 Eintracht S.C.	1948-49 New York S.C.
48 Hota S.C.	50 Pfaelzer S.C.

NEW YORK STATE JUVENILE CHALLENGE CUP

1949-50 Elizabeth

EASTERN DISTRICT SOCCER LEAGUE, by Dr. Eric Stoerger

Looking back upon the EDSL 1949-50 championship campaign, there is no escaping the fact that it had been characterized by one of the most interesting and dramatic stretch drives in the league's colorful history. At the outset, it appeared as if New World Club, title holders for three years running, would only have to parry the one serious challenge of Columbia F.C. However, both the champions and Columbia never had anticipated the tremendous surge during which the French S.C., sparked by gazelle-like goalie Etienne Vatelot, proceeded the two leading contenders on successive Sundays. At the same time, Maccabi was given a golden opportunity to catch up with the pack, and in notching a surprising 4-1 triumph at the expense of the champions, they went on to move into contention against the solid team of the league, Columbia.

The climactic match "for all the marbles" was played on the last day of the season. Mario Trapani's dashing youngsters were not to be denied when a gorgeous scoring effort by Giovanni La Pietra, their roving inside forward, resulted in the only goal of the contest. Columbia, in the wake of promotion to the league's top division in 1949, had finally toppled New World from its lofty throne. It remains to be added that Etienne Vatelot, on the basis of his miraculous goaltending, was awarded the MVP award ahead of La Pietra and Maccabi's ever prominent Julius Stein.

Other vital statistics show that New World's Eric Baer had attained the lowest "goals scored against"—average permitting only 1.25 goals per game. Harry Elkan, Maccabi's stellar guardian of the nets, Eric Baer, Herbert Heilpern, Hapoel, and Emil Da Ros, Columbia, finished in a dead heat for "most shut-outs" notching three apiece. Julius Stein barely managed to shade nimble-footed Giovanni La Pietra for goal-scoring honors by an 18-17 differential. And last but assuredly not least, those highflying Ukrainian booters wrested A-Division laurels from Milan (Hoboken). Other winners were: Maccabi (Reserve Division), Savoia (B-Division). Ukrainian Juniors copped the flag in the Junior loop and also finished runner-ups in the N.Y. Junior play-offs. The forthcoming season in the EDSL ought to prove another successful one what with the "old reliable" set of officials having been elected again.

League Prexy Ludolf Heidecker with such able assistants cannot but safeguard a fine tradition that has been an EDSL land-mark ever since its foundation by the late Theodore Weisenstein.

SECRETARY—Mex Bergman, 250 Ft. Washington Abe., N. Y. 32. WA 8-5666.
PRESIDENT—Ludolf Heidecker, 141 Nagle Ave., N. Y. 34. LO 7-7523.
VICE PRESIDENTS—
Henry Steglitz, 269 Hancock St., Brooklyn 16. WA 2-6929.

Society for American Soccer History

Mario Trapani, 200 E 104th St., N. Y. 29 TR 6-3325.
TREASURER—Willy Baer, 549 Riverside Drive, N. Y. 27. HA 2-0322.
REC.-SECRETARY—Werner Lahm, 580 W. 161st St., N. Y. LO 8-6894
SCHEDULE—Edwin Lowenstein, 561 W 147th St., N. Y. 31. WA 8-9747.
JUNIORS—Carl Freitag, 642 W 172nd St., N. Y. 32. WA 3-7507
PUBLICITY—Eric Korf, 1332 2nd Ave., N. Y. 21. TR 9-2671.
PHYSICIAN—Dr. M. Dessauer, 57 W 58th St., N. Y. PL 8-1230.
DELEGATES—
Dr. Eric Stoerger, 452 Ft. Washington Ave., N. Y. LO 8-9296.
Bohdan Prudius, 313 E 10th St., N. Y. OR 4-9250.
TRUSTEES—Eric Baruch, Lothar Katz, Herbert Heilpern.
ARBITRATION—W. Pagelson.

PREMIER DIVISION

	P	W	L	T	P
Columbia	16	13	3	0	26
New World	16	12	3	1	25
Maccabi	16	12	4	0	24
French	16	10	5	1	21
Hatikvoh	16	6	8	2	14
Bronx Jewish	16	4	9	3	11
Caribbean	16	4	12	0	8
Armenian	16	3	11	2	8
Hapoel	16	2	11	3	7

A DIVISION

	P	W	L	T	P
Ukrainian	14	12	1	1	25
Milan	14	11	1	2	24
Warsaw	14	11	2	1	23
Hudson	14	6	8	0	12
Maccabi	14	5	9	0	10
Italian	14	5	9	0	10
French	14	3	10	1	7
Versatile	14	0	13	1	1

RESERVE DIVISION

	P	W	L	T	P
Maccabi	14	12	2	0	24
Columbia	14	11	2	1	23
New World	14	9	4	1	19
Ukrainian	14	8	4	2	18
Warsaw	14	5	9	0	10
French	14	3	9	2	8
Armenian	14	3	10	1	7
Bronx Jewish	14	2	11	1	5

B DIVISION

	P	W	L	T	P
Savoia	8	6	2	0	12
New World	8	4	3	1	9
Maccabi	8	4	3	1	9
Versatile	8	4	4	0	8
Ukrainian	8	1	7	0	2

PREMIER DIVISION

1939-40 Union City
41 Youth S.C.
42 Prospect Unity
43 Maccabi A.C.
44 Swiss F.C.
45 Hakoah A.C.
1945-46 Maccabi A.C.
47 New World S.C.
48 New World S.C.
49 New World S.C.
50 Columbia

A DIVISION

1939-40 Workers S.C.
41 Newark Jewish Unity
42 Maccabi A.C.
43 Simplex F.C.
44 West New York
45 Swiss F.C.
1945-46 Hakoah A.C.
47 Maccabi A.C.
48 Carribean F.C.
49 Columbia F.C.
50 Ukrainian

RESERVE DIVISION

1948-49 French F.C.
1949-50 Maccabi

Society for American Soccer History

B DIVISION

1946-47	Bronx J.S.C.	1948-49	New World S.C.
48	Maccabi A.C.	50	Savoia

PAST PRESIDENT AND SECRETARIES

	President	Secretary
1939-48	Teddy Weisenstein	1942-44 Ludwig Straus
48-49	Ludolph Heidecker	44-45 Fred Wachter
49-51	Ludolph Heidecker	45-51 Maz Bergman

EMPIRE STATE JUNIOR LEAGUE

SECRETARY—Paul Gioia, 1736 West 13th Street, Brooklyn. CL 6-5608.

	P	W	L	T	P		P	W	L	T	P
Hispano	10	9	0	1	19	Hokoah	10	3	7	0	6
St. Athanasius	10	7	2	1	15	Gjoa	10	2	7	1	5
Swedish	10	7	3	0	14	Bay Ridge Un.	10	0	9	1	1

PAST PRESIDENTS AND SECRETARIES

	President	Secretary		President	Secretary
1935-36	Robert Kerr	A. Thornquist	40-41	W. Andersen	Wm. Graham
37	Robert Kerr	Jos. Doherty	42	W. Andersen	Wm. Graham
38	Robert Kerr	Wm. Graham	47-48	W. Andersen	Wm. Graham
39	W. Anderson	Wm. Graham	49	W. Andersen	Wm. Graham
40	W. Andersen	Wm. Graham	50	R. Michaelsen	P. Gioia

LEAGUE CHAMPIONS AND RUNNER-UP

1935-36	Bay Ridge Hearts F.C.	1940-41	Ray Ridge Hearts F.C.
37	Norwegian Turn. Society	42	Bay Ridge Hearts F.C.
38	Bay Ridge Hearts F.C.	48	Gjoa S.C.
39	Swedish F.C.	49	Gjoa S.C.
	Hatikvoh S.C.	50	Brooklyn Hispano
40	Yorkville Athletic F.C.		

LEAGUE CUP

1936-37	Centro Asturiana F.C.	40	Bay Ridge Hearts F.C.
38	Bay Ridge Hearts F.C.	41	Bay Ridge Hearts F.C.
39	Bay Ridge Hearts F.C.	1948-50	No competition.

GERMAN-AMERICAN LEAGUE, by Milt Miller, L.I. Press



Milt Miller

It would seem that as the German-American Soccer League swings into its second 25 years of operation, the trail it blazed will become brighter. During the first quarter century, the G-A circuit established itself as one of the outstanding loops in the country, organizationally, financially and otherwise.

Thanks to sterling leadership by veteran officials, the league embarked on another endeavor which seems headed for the same successful pattern. That was in the field of sponsoring visits by foreign teams.

The overwhelming success of the six-game tour by the Hamburg S. V. has convinced the league of its latent talents in that field. As a result, at least one more visit is planned for the 1950-51 campaign. The opening game of the tour, which also inaugurated the appearances

Society for American Soccer History

of foreign teams on these shores last Spring, drew a capacity crowd of 20,000 to Triborough Stadium in New York. It was not only the biggest draw for the Hamburg tour but also capped all other attractions for the year in the United States.

For Hamburg, the tour was also a complete success, winning all six matches which were played in New York (2), Newark, Rochester, Chicago and Philadelphia. As part of the deal, the league sent a team to Germany in August for a eight-game tour.

The regular campaign also was successful with the complete schedule being finished before June rolled around. Eintracht displaced the thrice-championship Elizabeth team as king of the Big Ten Division. Hoboken captured the Premier Division title and thereby won promotion back to the Big Ten group after a year in the lower section. The promotion-demotion system accounted for the return of the German-American A. C. to the Premier circle as a result of finishing in last place in the Big Ten.

Eintracht went into the lead early in the competition and maintained it throughout. By March 22, it captured the crown with a good margin to spare. On the other hand, the big battle was waged on the lower end of the Big Ten standings with Brooklyn, Swiss and German-Americans fighting to keep out of the cellar berth which brought with it relegation to the Premier Division.

Hoboken had gotten off to a slow start with Prospect Unity, Greek-Americans and New York Hungarians looming as the possible winners. But by the time the halfway mark was reached, Hoboken had asserted itself and forged into the lead in a see-saw battle. It wasn't until April that Manager Karl Esselborn and his Hoboken booters could breathe easier.

While most of the G-A teams didn't go too far in the National Challenge Cup, Eintracht reached the Eastern final of the National Amateur Cup before being eliminated by Ponta Delgada.

SECRETARY—Hans Chalfon, 1604 Jesup Ave., Bronx 52, N.Y. LU 3-2337.
PRESIDENT—Harry Kraus, 1724 Hart St., Brooklyn 27, N.Y. HE 3-4298.
VICE PRESIDENTS—
Helmuth Peters, 374 Third Ave., Elizabeth, N.J.
Robert Tonn, 1717 Norman St., Brooklyn 27, N. Y.
Karl Bauer, 635 E 211st St., Bronx, N. Y.
TREASURER—Henry Haarer, 1148 Rogers Ave., Brooklyn 26, N. Y.
GAMES—Joseph Beck, 31-30 81st St., Jackson Heights, L.I.
REGISTRAR—Fred Dettmer, 2863 Lawton Ave., Bronx 61, N. Y.
JUNIORS—Ernst Nussbaum, 308 E 86th St., N.Y. 28, N.Y.
ARBITRATION—Conrad Schuricht, 3017 Riverdale Ave., Bronx, N.Y.
HISTORIAN—Willie Herkert, 576 Fairview Ave., Brooklyn 27, N.Y.
REC. SECRETARY—Sigmund Ackerman, 241 E 176th St., Bronx, N.Y.
PRESS—Anton Haegele, 66-81 Forest Ave., Brooklyn 27, N.Y.
DELEGATES—
Rudy Obermaier, 208 E 54th St., New York, N.Y.
Benny King, 8708 Corona Ave., Elmhurst, L.I., N.Y.
COUNCIL—
August Steuer, 40-48 Hampton St., Elmhurst, L.I., N.Y.

Society for American Soccer History

John Stox, 186-19 Wexford Terrace, Jamaica Estate, L.I., N.Y.
Fred Springer, 22-18 26th St., Astoria, L.I., N.Y.
Vin. Hemberger, 32-29 42nd St., Astoria, L.I., N.Y.

AUDITORS—Henry Webel, Hans Bayen, Plinio Perini.

BROOKLYN S.C. Metropolitan Oval.
Albert Zehend, 127-29—102nd Ave., Richmond Hill, N.Y., VI 7-6532M.

COLLEGE POINT. College Point Field.
Joseph Grasser, 20-45—127th St., College Point, N.Y., Flushing 8-488

EINTRACHT S.C. Eintracht Oval.
Charles Fink, 12-21 30th Ave., Astoria 2. RA 6-0028.

ELIZABETH S.C. Farchers Grove.
Paul Klein, 42 Dodd St., Bloomfield, J.J. BL 2-7560.

GERMAN-AMERICAN A.C. Eintracht Oval.
Paul Meder, 213 E. 82nd St., New York 28, RH 4-9288.

GERMAN-HUNGARIAN S.C. Metropolitan Oval.
Erich Werner, 53-136 63rd St., Maspeth, L.I., N.Y. HA 6-7073.

GIULIANA. 112th St., First Avenue.
M. Caris, 399 8th Ave., N.Y.C. LO 4-6219.

GREEK-AMERICAN. Woodward Oval.
James Nikides, 236 W. 27th St., New York City. DI 2-1966.

HOTA S.C. Scheutzen Park.
Joe Beck Jr., 1320 Fulton Ave., Bronx. CY 3-3585.

HOBOKEN S.C. Scheutzen Park.
Fred Van Dyken, 1121 Garden St., Hoboken. Hoboken 4-1165.

KOLLSMAN S.C. New Farmers Oval.
Hans Bayen, 22-17 Harman St., Brooklyn 27, N.Y. HE 3-0971.

MINERVA S.C. Queens Soccer Field.
Charles Ille, 92-24 241 St., Bellerose 6, N.Y. Fieldstone 7-3920.

NEWARK S.C. Farchers Grove.
Karl Sonnet, 226 Munn Ave., Irvington, N.J. MI 2-3486.

NEW ROCHELLE. Columbus Field.
81 Union Ave., New Rochelle. N.R. 2-1573W.

NEW YORK S.C. Throggs Neck Stadium.
Hans Blaeser, 43-39 41st, Sunnyside 4, N.Y. IR 6-1843.

NEW YORK HUNGARIAN F.C. Hunts Point Stadium.
Michael Szuchy. 1528 Second Ave., N.Y.C. RH 4-7120.

PASSAIC S.C. Pulaski Field.
A. Vollbrecht, 142 Marietta Ave., Passaic, N.J.

PFAELZER S.C. New Farmers Oval.
Otto Rosenberger, 1906 Grove St., Brooklyn, N.Y. HY 7-5966.

PROSPECT UNITY S.C. Woodward Oval.
H. Uhlfelder, 910 Riverside Dr., N. Y. 322, LO 8-5975.

SCHLESIER S.C. College Point Field.
Walter Laegner, 19-26 77th St., Jackson Heights, N.Y. RA 6-1102.

SCHWABEN S.C. Throggs Neck Stadium.
Charles Hertel, 343 86th St., N.Y.C. AT 9-1360.

SWISS S.C. Valley Stream.
Felix Schlumpf, 50 West 88th St., New York City. MU 6-1235.

WEST NEW YORK S.C. Memorial Field.
Michael Murphy, 433 67th St., West New York, N.J. Union 5-1761.

Society for American Soccer History

WHITE PLAINS S.C. George Washington H.S.
A. Carlson, 239 S. Lexington Ave., White Plains, N.Y. W.P. 9-2993M.
YONKERS S.C. Tibbets Brook Field.
Clubhouse, 96 Warburton Ave., Yonkers.

MAJOR DIVISION

	P	W	L	T	P
Eintracht	18	15	2	1	31
New York	18	10	3	5	25
Hota	18	10	7	1	21
Newark	18	7	6	5	19
Ger.-Hungarian	18	7	6	5	19
Elizabeth	17	8	7	2	18
Pfaelzer	18	7	9	2	16
Swiss	18	4	10	4	12
Brooklyn	17	3	10	4	10
Ger.-American	18	1	12	5	7

PREMIER DIVISION

	P	W	L	T	P
Hoboken	20	17	2	1	35
Prospect	20	14	4	2	30
Greek-American	20	12	5	3	27
Minerva	20	11	6	3	25
N.Y. Hungarian	20	9	6	5	23
Schwaben	20	6	8	6	18
Passaic	20	5	8	7	17
Kollsman	20	6	12	2	14
College Point	20	6	13	1	13
Giuliana	20	4	14	2	10
White Plains	20	2	14	4	8

A DIVISION

	P	W	L	T	P
West New York	12	8	0	4	20
Eintracht	12	7	2	3	17
Schlesier	12	7	2	3	17
Yonkers	12	6	3	3	15
New Rochelle	12	4	8	0	8
Swiss	12	2	10	0	4
Gun Hill	12	1	10	1	3

B DIVISION

	P	W	L	T	P
Ger.-Hungarian	12	12	0	0	24
New York	12	7	4	1	15
Eintracht	12	6	5	1	13
Brooklyn	12	5	5	2	12
Prspect	12	4	7	1	9
Schwaben	12	2	8	2	6
Swiss	12	2	9	1	5

PAST PRESIDENTS AND SECRETARIES

	President	President		Secretary	Secretary
1923-24	T. Leuthauser	L. Westermayers	1937-38	August Steuer	F. Bentler
25	Oscar Kolb	A. Biheller	39	August Steuer	F. Bentler
26	Oscar Kolb	A. Biheller	40	August Steuer	F. Bentler
27	Alf. Weinberger	F. Schartel	41	August Steuer	F. Bentler
28	Alf. Weinberger	F. Schartel	42	Rudolf Sautter	F. Springer
29	Alf. Weinberger	F. Schartel	43	Rudolf Sautter	F. Springer
30	Fritz Burkhardt	F. Schartel	44	John Stox	J. Beck
31	Fritz Burkhardt	F. Schartel	45	John Stox	J. Beck
32	Henry Webel	F. Schartel	46	Eugene Held	J. Beck
33	Jack Ruehle	F. Schartel	47	Eugene Held	J. Beck
34	Paul Roters	F. Schartel	48	Harry Kraus	J. Beck
35	Paul Roters	W. Herkert	49	Harry Kraus	J. Beck
36	Paul Roters	W. Herkert	50	Harry Kraus	H. Chalfon
37	Franz Graulich	W. Herkert	51	Harry Kraus	H. Chalfon

"SOCCER" MOST VALUABLE PLAYER AWARD

1943-44	Marchetich, German-American	1947-48	A. Hritz, Elizabeth
45	Marchetich, German-American	48	A. Hritz, Elizabeth
46	Weck, Hota	49	Geiger, Elizabeth
47	Geiger, Elizabeth	50	Van Steen, Hota

Society for American Soccer History

Premier Division

1946-47 Rice, Newark

1949-50 Behnke, Hoboken

DIVISION CHAMPIONS

MAJOR DIVISION

*League Champion

1935-36 *Brooklyn S.C. (N.Y.)
Olympic (N.J.)
37 Hatikvoh F.C. (N.Y.)
*Newark S.C. (N.J.)
38 Hoboken F.C. (N.Y.)
*Elizabeth (N.J.)
39 *Brooklyn S.C. (N.Y.)
Newark (N.J.)
40 *Ger.-Hungarian F.C. (N.Y)
Elizabeth S.C. (N.J.)
1940-41 *German-Hungarian F.C.
42 *German-American A.C.
43 *Eintracht S.C.
46 *Eintracht S.C.
47 *Elizabeth S.C.
48 *Elizabeth S.C.
49 *Elizabeth
50 *Eintracht S.C.

PREMIER DIVISION

1927-28 *Newark S.C.
29 *Newark S.C.
30 *German-Hungarian F.C.
31 *Vienna S.C.
32 *Newark S.C.
33 *German-Hungarian F.C.
34 *German-American A.C.
35 *Brooklyn S.C. (N.Y.)
Elizabeth S.C. (N.J.)
36 Hempstead SC.
37 South German F.C.
1937-38 Eintracht S.C.
39 Kollsman F.C.
40 Prospect Unity F.C.
41 Passaic S.C.
44 *Eintracht S.C.
45 *Eintracht S.C.
46 Schenectady F.C.
47 Newark S.C.
48 German-American A.C.
49 Swiss
50 Hoboken S.C.

MAJOR RESERVE DIVISION

1935-36 New York S.C.
1946-47 New York S.C.
48 New York S.C.
1948-49 German-Hungarian S.C.
50 New York S.C.

PREMIER RESERVE DIVISION

1931-32 Newark S.C.
34 New York S.C.
35 New York S.C.
37 Hatikvoh F.C.
1946-47 Minerva F.C.
48 German-American A.C.
49 Minerva S.C.
50 N. Y. Hungarian F.C.

A DIVISION

1930-31 College Point F.C. (N.Y.)
New Brunswick S.C. (N.J.)
32 Ridgewood F.C. (N.Y.)
Olympic F.C. (N.J.)
33 S.C. Jung-Gerlin (N.Y.)
Newark Reserves (N.J.)
Ger.-Hungarian Res. (L.I.)
34 Hota F.C. (N.Y.)
New Brunswick (N.J.)
Pfaelzer F.C. (L.I.)
35 Swiss F.C. (N.Y.)
Ridgewood F.C. (L.I.)
36 Victoria F.C.
1936-37 New York S.C.
38 Kollsman F.C.
39 Brooklyn S.C. Reserves
42 Hota F.C.
43 Schlesier F.C.
44 Elizabeth Reserves
45 Newark Reserves
46 Hota F.C. 2
47 Passaic S.C.
48 New York S.C.
49 Eintracht S.C.
50 West New York

Society for American Soccer History

B DIVISION

1929-30	New York S.C.	1937-38	Ger.-Hungarian S.C. 2 (1st)
31	Hakoah F.C. 2 (N.Y.)		Eintracht S.C. 3 (2nd)
	Newark S.C. 2 (N.J.	39	Sparta Little Neck 1st)
32	New York S.C. 2 (N.Y.)		Ger.-Hungarian S.C. (2nd)
	Newark S.C.	40	Ger.-American A.C. 2 (1st)
33	German-American A.C. 2		Vienna S.C. (2nd)
34	Elizabeth S.C. 2	41	Tarrytown F.C. (1st)
35	Swiss F.C. (N.Y.)		Ger.-Hungarian S.C. 2 (2nd)
	Gloria S.C. (L.I.)	42	Hota F.C. 2
36	South German S.C. 2 (N.Y.)	43	Minerva F.C. 2
	Brooklyn S.C. 2 (L.I.)	46	Eintracht 3
37	Brooklyn SC. (1st Div.)	50	German-Hungarian S.C.
	Prague F.C. (2nd Div.		

LONG ISLAND LEAGUE—By Joe Austin

Secretary, Walter Fritsch, 31a Wood Rd., Great Neck. Great Neck 2-3931-R.
President, Carl Weber, 9 Sobo Ave., Franklin Sqr. Floral Park 2-3735.
V. President, G. Lechner, 107-06 Liberty Ave., Ozone Park. Virginia 8-2390.
Rec. Secretary, Alex Cambria, 11 Plymouth Ave., Mineola. Garden City 7-7043.
Treasurer, Douglas Denton, 145-47 224 St., Springfield Gardens. Laurelton 5-5479.
Counsel, Harry A . Shapiro, 311 Hempstead T'pk,Franklin Square.
Advisory Council, Peter Renzulli, 13-15 160 St., Beechhurst; Andrew Henle, 116-12 207 St., St. Albans; Fred Appis, 78-12 Kneeland Ave., Elmhurst.

	P	W	L	T	P
Flushing Heights	10	8	2	0	16
Great Neck	11	5	4	3	13
Mineola	11	4	4	3	11
Franklin Sqr. Neon	11	3	1	1	7
Hempstead	9	2	6	1	5

LONG ISLAND CHALLENGE CUP—1. Flushing Heights; 2. Mineola; 3. Great Neck.

METROPOLITAN DISTRICT LEAGUE, by Joseph Tolan



Joseph Tolan

Competition during the season was exceptionally keen and in the Premier Division the issue was not settled until near the close of the season. Long Island Rangers, under the management of Bob MacInnes, bagged dual honors when his team won both the Premier Division and the Metropolitan Challenge Cup. Mola won First Division honors by finishing eight points ahead of Marli. While more applications for membership are pending four new clubs, Espano, Brooklyn-Italian, Vesturiana and Sada B, will take part in the plays in the new season.

What will be the Met League's loss will be the State Association gain when Bob MacInnes, secretary for the past season, moves over to take a similar position with the New York controlling body.

SECRETARY—Tom. Mainwaring, 872 43rd St., Brooklyn, N.Y.

Society for American Soccer History

PRESIDENT—Joseph Tolan, 21-31 89th St., Jackson Heights, L.I., N.Y.
VICE PRESIDENTS—
J. Rojas, 8708 Avenue B, Brooklyn, N.Y.
J. Powell, 941 Stebbins Ave., Bronx, N.Y.
TREASURER—Ernst Bruce, 749 55th St., Brooklyn, N.Y.
REC. SECRETARY—L. Francis, 535 W 141st St., N.Y.C.
BUS MGR.—George Connal, 425-68th St., Brooklyn, N.Y.
DELEGATES—Joseph Tolan, J. Rojas.

PREMIER DIVISION

	P	W	L	T	P
L.I. Rangers	16	13	1	2	28
Malta Un.	16	11	4	1	23
Bliss Un.	16	8	4	4	20
Sada	16	8	7	1	17
Peru	16	6	8	2	14
Segura	16	5	9	2	12
Bedford Hills	16	4	8	4	12
Carlisle Rov.	16	3	11	2	8
Cork Celtic	16	1	9	6	8

FIRST DIVISION

	P	W	L	T	P
Mola	16	14	1	1	29
Marli	16	10	5	1	21
Peru B	16	6	8	2	14
St. Benedict	16	5	8	3	13
Gjoa B	16	6	9	1	13
Forest Hills	16	6	9	1	13
Malta B	16	3	10	3	9
Naples	16	2	14	0	4
Prague B	16	2	14	0	4

LEAGUE CHALLENGE CUP

	Winner
1932-33	Greenock W.O.S.
34	Swedish F.C.
35	St. Mary's Celtic F.C.
36	Norwegian Turn. Soc., F.C.
37	Swedish F.C.
38	Danish A.C.
39	Nassau F.C.
40	Bronx Scots F.C.
41	Cork Celtic F.C.
1941-42	Bronx Scots F.C.
43	Bronx Scots F.C.
44	Cork Celtic F.C.
45	Segura F.C.
46	Gjoa S.C.
47	N.Y. Hungarian F.C.
48	Gjoa S.C. B
49	Galicia F.C. B
50	L.I. Rangers

PREMIER DIVISION

1931-32	Nassau F.C.
33	Norwegian Turn. Soc., F.C.
34	Nassau F.C.
35	St. Mary's Celtic F.C.
36	Swedish F.C.
37	Hakoah A.C.
38	Hakoah A.C.
39	Flatbush Wanderers F.C.
40	Bronx Scots F.C.
41	Cork Celtic F.C.
1941-42	Bronx Scots F.C.
43	Local 32 B. F.C.
44	Segura F.C.
45	Cork Celtic F.C.
46	Bronx Scots F.C.
47	N.Y. Hungarian F.C.
48	Staten Isl. Favorites F.C.
49	Staten Isl. Favorites F.C.
50	L.I. Rangers

FIRST DIVISION

1928-29	Clan Bruce F.C.
30	Clan Bruce F.C.
31	Prague F.C.
	Greenpoint Celtic F.C.
32	Shamrock Rovers F.C.
33	Manhattan F.C.
34	Malta United F.C.
35	Greenock W.O.S. B.F.C.
36	Shamrock Rovers F.C.
37	Shamrock Rovers F.CC.
38	Bronx Scots F.C.
	Flatbush Wanderers F.C.

Society for American Soccer History

1938-39	Belfast United F.C.	44	Peru F.C.
40	Segura F.C.	47	Gjoa B S.C.
41	Prague Reserves F.C.	48	Prague A F.C.
42	Bronx A.C.	49	Segura
43	Segura F.C.	50	Mola

PAST PRESIDENTS AND SECRETARIES

	President	Secretary		President	Secretary
-29	John Thompson	Jack Robbs	41	James J. Jordon	James Graham
30	John Thompson	Jack Robbs	42	James J. Jordon	James Graham
31	Robert Kerr	James Graham	43	James J. Jordon	John McKim
32	Robert Kerr	James Graham	44	James J. Jordon	John McKim
33	Robert Kerr	James Graham	45	John McKim	James Graham
34	Robert Kerr	James Graham	46	John McKim	James Graham
35	Robert Kerr	James Graham	47	Thomas Scollan	James Graham
36	James J. Jordon	James Graham	48	Thomas Scollan	James Graham
37	James J. Jordon	James Graham	49	Joseph Tolan	Ernest Bruce
38	James J. Jordon	James Graham	50	Joseph Tolan	Robert McInnes
39	James J. Jordon	James Graham	51	Joseph Tolan	Tom Mainwaring
40	James J. Jordon	James Graham			

NATIONAL LEAGUE

Secretary, James Graham, 5612 Sixth Ave., Brooklyn 20. GE 9-5830.

BIGELOW-SANFORD F.C. Amsterdam, N.Y.
James Grayson, 299 Brookside Ave., Amtesrdam, N.Y. Amsterdam 4445.

DANISH A.C. 8th Ave. at 65 St.
Lawrence Olsen, 135 Willow St., Brooklyn, N.Y. MA 5-6760.

GJOA S.C. 8th Ave. at 65th St.
Fred Fredricksen, 8302 6th Ave., Brooklyn, N.Y. TE 6-3022.

PATERSON DOVERS. Sandy Hill Field.
Frank Frisby, 326 E. 26th St., Paterson. Lambert 3-4773.

PRAGUE A.F.C. Hunts Point Stadium.
Joe Cheeben, 928 Kelly St., Bronx, N.Y. DA 8-3797.

SWEDISH F.C. 8th Ave. at 65th St.
William Anderson, 314 79th St., Brooklyn, N.Y. SH 5-4143.

WARSAW F.C. McGoldrick Field.
Gus Romanick, 121 E. 10th St., New York City.

YONKERS-AMERICANS. Prescott Field.
Edward Feeley, 198 Hawthorne Street, Yonkers, N.Y.

LEAGUE

	P	W	L	T	P
Paterson-Dovers ...	12	8	0	4	20
Prague A.C.	12	8	4	0	16
Bigelow Sanford ...	12	5	4	3	13
Swedish F.C.	12	5	5	2	12
Yonker Americans .	12	5	5	2	12
Gjoa S.C.	12	2	8	2	6
Danish A.C.	12	1	8	3	5

LEAGUE CUP

	P	W	L	T	P
Yonker Americans ..	5	5	0	0	10
Paterson Dovers ...	5	4	1	0	8
Prague A.C.	5	3	2	0	6
Gjoa S.C.	5	2	3	0	4
Swedish F.C.	5	1	4	0	2
Danish A.C.	5	0	5	0	0

Society for American Soccer History

LEADING GOALSCORERS

LEAGUE

J. Adamcik Prague	10	J. Brown, Swedish	8	W. Campbell, Bigelow	6
D. Nash, Paterson	9	H. Tolason, Bigelow	7	W. Carlson, Swedish	6
E. Brown, Paterson	8	A. Ballantine, Paterson	7	T. Sercovic, Prague	6

LEAGUE CUP

J. O'Neil, Yonkers	6	G. Thorsen, Swedish	4	W. Carlson, Swedish	
E. Brown, Paterson	6	A. Ralston, Paterson	3	T. Sefkovac, Prague	3
T. Nelson, Yonkers	5	D. Nash, Paterson	3	F. Cincotto, Gjoa	3

PAST PRESIDENTS AND SECRETARIES

	President	Secretary		President	Secretary
1938-39	W. Andersen	Carl Hansen	1947-48	Jack Flamhaft	Carl Hansen
40	W. Andersen	Carl Hansen	49	Jack Flamhaft	Carl Hansen
41	J. J. Barriskill	Jack Flamhaft	50	Carl Hansen	Jas Graham
42	J. J. Barriskill	Jack Flamhaft	51	Carl Hansen	Jas Graham
47	Carl Hansen	Frank Grennari			

LEAGUE CHAMPIONS

1938-39	Danish A.C.	1946-47	Bigelow-Sanford F.C.
40	Swedish F.C.	48	Segura F.C.
41	Healy F.C.	49	Segura F.C.
42	Bigelow-Sanford F.C.	50	Paterson-Dovers F.C.

LEAGUE CUP CHAMPIONS

1939-40	Swedish F.C.	1947-48	No competition
41	Swedish F.C.	49	Paterson Dovers
42	Swedish F.C.	50	Yonkers Americans
47	Galicia F.C.		

"SOCCER" MOST VALUABLE PLAYER AWARD

1946-47	Dave Maier, Hakoah	48	Manny Horowitz, Hatikvoh

NEW YORK JUNIOR COMPETITION

By Charlie Fink, Secretary

MAJOR DIVISION

	P	W	L	T	P
Eintracht	14	10	0	4	24
Ger.-Hungarian ..	14	10	2	2	22
Ger.-American ...	14	10	2	2	22
Elizabeth	14	6	5	3	15
New York	14	6	5	3	15
Brooklyn	14	2	10	2	6
Newark	14	2	11	1	5
Hota	14	1	12	1	3

PREMIER DIVISION

	P	W	L	T	P
*Koilsman	12	9	0	3	21
Schwaben	12	9	0	3	21
Pfaelzer	12	6	3	3	15
Minerva	12	4	4	4	12
Greek-American .	12	1	8	3	
College Point	12	2	9	1	
N.Y. Hungarian ..	12	1	8	3	5

* Winner playoff and league champion.

Society for American Soccer History

EASTERN D. L. DIVISION

	P	W	L	T	P
Ukrainian	14	12	1	1	25
B'klyn Wanderers	14	9	5	0	18
Maccabi	14	9	5	0	18
Prospect Unity ..	14	7	6	1	15
New World	14	5	6	3	13
Bronx Jewish	14	5	7	2	12
Bronx Braves ...	14	3	9	2	8
Queens United ...	14	1	12	1	3

MAJOR JUVENILE DIVISION

	P	W	L	T	P
*Elizabeth	10	9	0	1	19
Eintracht	10	6	3	1	13
Hota	10	5	3	2	12
New York	10	5	3	2	12
Pfaelzer	10	1	8	1	3
Maccabi	10	0	9	1	1

* Winner playoff and league champion.

A DIVISION

	P	W	L	T	P
Eintracht B	10	9	0	1	19
Ger.-American B..	10	7	2	1	15
Schlesier	10	6	4	0	12
Brooklyn B	10	3	7	0	6
Hempstead	10	2	8	0	4
West New York..	10	1	9	0	2

Playoffs, Kollsman 1, Eintracht B 0; EintrachtA 0, Ukrainian 1; Kollsman4, Ukrainian 1.

PREMIER JUVENILE DIVISION

	P	W	L	T	P
Kollsman	12	12	0	0	24
Schlesier	12	8	2	2	18
Minerva	12	5	5	2	12
Schwaben	12	4	5	3	11
College Point	12	4	7	1	9
Franklin Sqr. ...	12	3	9	0	6
Prague	12	1	9	2	4

BOYS DIVISION

	P	W	L	T	P
*Pfaelzer	10	7	1	2	16
New York	10	7	1	2	16
Elizabeth	10	4	2	4	12
Kollsman	10	5	4	1	11
Hota	10	2	7	1	5
Eintracht	10	0	10	0	0

* Winner playoff.

NATIONAL JUNIOR CUP—N.Y. Final, German-Hungarian 2, Eintract A 0! Eastern Final, Harrison B.C. 1, German Hungarian 0.
N.Y. STATE CUP—New York 1-4, Schwaben 1-0.
N.Y. STATE JUVENILE CUP—Elizabeth 2 Albany 1.
N.Y. STATE BOYS CUP—Pfaelzer.

A DIVISION JUNIORS

1943-44	German-Hungarian S.C.	1946-47	Kollsman F.C.
45	Prague F.C.	48	Kollsman F.C.
46	Prague F.C.		

B DIVISION JUNIORS

1943-44	French S.C.	1946-47	New York S.C.
45	Brooklyn S.C.	48	New World F.C.
46	West New York F.C.		

C DIVISION JUNIORS

1946-47	German-American A.C.	1947-48	German American A.C.

BROOKLYN DIVISION

1948-49 *German-Hungarian S.C.

MANHATTAN DIVISION

1948-49 New York S.C.

Society for American Soccer History

QUEENS DIVISION

1948-49	Eintracht S.C.

A DIVISION JUVENILES

1943-44	German-Hungarian S.C.	48	Eintracht S.C.
45	Kollsman F.C.	49	Eintracht S.C.
46	New York S.C.		

B DIVISION JUVENILES

1945-46	New York S.C.	1947-48	Schwaben S.C.
47	College Point S.C.	49	Kollsman S.C.

C DIVISION JUVENILES

1945-46	Red Devils F.C.	Co-Champions	College Point S.C.

BOYS DIVISION

1945-46	Eintracht S.C.	1947-48	Hota S.C.
47	Eintracht S.C.	49	New York S.C

NEW YORK STATE REFEREES—By Sam Galin



Sam Galin

The past season has been progressive. Attendances at Referees' School have increased. Of the 360 registered referees throughout the country this body leads with 86 and a definite asset is the recent acquistion of James McLean, former Scottish first division arbiter.

Have just returned from Scotland and England and while there in addition to refereeing a game made a study of their methods. We are going ahead with the further study and teaching of the fixed diagonal system of officiating which has been used in all international games played last season.

While foreign teams were playing here in May and June pictures were taken on 350 feet of film in addition to that taken abroad and this will be used extensively in the clinics which will start in Sept.

NEW YORK CITY GROUND LOCATIONS

AIRPORT OVAL—Astoria Blvd. & 85 St. Astoria IRT to Ditmars Ave.
BAY RIDGE—8th Ave. & 65th St., Brooklyn. BMT Sea Beach Exp. to 8th Ave.
BEDFORD HILLS H.S.—N.Y. Central train to Bedford Hills.
CATING OVAL—53 Ave. & 71 Flushing IRT to Woodside. Bus to 52 &69 St.
CENTRAL PARK—66th St. & Central Pk. W; 5th Ave. & 96th St.
COLLEGE POINT FIELD—18 Ave. & 127 St. Orange bus from Flushing.
CURTIS H.S.—Ferry to St. George. Bus 101 to school.
DEWITT CLINTON H.S.—Concourse & 205 St. IRT Grand Concou to Bedford Ave.
DYKER PARK—14 Ave. & 86, Brooklyn. BMT West End to 18th Ave.
EINTRACHT OVAL—20th & 37 St., Astoria. From Queens Plaza Steinway Ave. bus to field.

Society for American Soccer History

FIREMANS FIELD—Merrick Rd. bus from Jamaica to Valley Stream.
FOREST HILLS H.S.—IND E or F to Union Turnpike. Bus to school.
FORT HAMILTON H.S.—Colonial Rd. & 84 St., Brooklyn. BMT 4th Ave. to 86 St.
HAWTHORNE FIELD—Hawthorne & Brooklyn Ave. Flatbush IRT to Winthrop.
HEMPSTEAD STATE PARK—IND to Jamaica ter. Hempstead bus to Franklin Square.
JACKSON ST. SCHOOL—IND to Jamaica terminal. Mineola bus to Marcellus Ave.
MEMORIAL FIELD—Pt. Washington L.I.R.R. to Great Neck. Bus to Fairfield Ave.
MCGOLRICK FIELD—Debevoise & Jackson Aves. Canargie BMT to Graham.
NEW FARMERS OVAL—Metropolitan Ave., Brooklyn. BMT Chambers to terminal.
NINETY THIRD & NORTHERN BLVD.—IND to Steinway St.
QUEENS SOCCER FIELD—Braddock & 222. IND to 168 St. Bus QU-1
QUEENSBOROUGH OVAL—1st Ave. & 59 St. 59 St. bus. Ist Ave. bus.
RED HOOK STADIUM—IND Church to Smith & 9th, Brooklyn.
ST. CATHERINE FIELD—IND to Jamaica terminal. Hempstead bus to Franklin Sqr.
ST. NICHOLAS FIELD—IND to Parsons Blvd. Bus to Union Turnpike.
SCHMULS PARK—Ferry to St. George. Travis 112 bus to school.
STERLING OVAL—Teller & 165 St. IND "D" to 167 St. & Grand Concourse.
THOS JEFFERSON FIELD—1st Ave. & 112 St. IRT Lexington to 116.
THROGGS NECK—Harding & Davis Aves. IRT to Worchester Sqr. Bus to field.
VAN CORTLAND PARK—Broadway & 242 St. IRT Van Cortland Park to terminal.
WINGATE FIELD—E & K Aves. at 16 St., Brooklyn. BMT Brighton to Ave. J.
WOODWARD OVAL—Woodward & Flushing Ave., Brooklyn. Canarsie BMT to Jefferson.

PUBLIC SCHOOLS ATHLETIC LEAGUE

1949 STANDINGS

MANHATTAN DIVISION

	W	L	T	P
Stuyvesant	6	1	1	13
Haaren	6	1	1	13
Machine & Metal	4	3	1	9
Manhattan Aviation	2	5	1	5
aCommerce	0	8	0	0

*Winner playoff
aForfeited 7 wins—ineligible player

BROOKLYN DIVISION 1

	W	L	T	P
Brooklyn Tech	10	0	0	20
Bushwick	6	2	2	14
Boys	4	4	2	10
Erasmus Hall	2	4	4	8
Jefferson	2	7	1	5
Automotive	1	8	1	3

Society for American Soccer History

BRONX DIVISION 1

Cobleskill	7	0	0	14
Monroe	5	3	0	10
Morris	4	3	0	9
Commerce	2	5	0	5
Roosevelt	0	7	0	0

BRONX DIVISION 2

*DeWitt Clinton	6	0	0	12
Roosevelt Theilds	4	2	0	8
Jefferson	2	4	0	4
Taft	0	6	0	0

*Bronx Champion

BROOKLYN DIVISION 2

*Lafayette	8	0	0	16
Richmond	4	4	0	8
Fort Hamilton	2	4	2	6
Manual	2	4	2	6
Lincoln	0	5	2	4

*Brooklyn champion

QUEENS DIVISION

Cleveland	8	0	0	16
Forest Hills	6	2	2	14
Bryant	4	4	2	10
Newtown	4	4	2	10
Jackson	0	6	2	5
Jamaica	0	7	2	4

SEMI FINALS. Lafayette defeated Stuyvesant. Cleveland defeated Clinton. Clinton defeated Stuyvesant for third place.

Final played Brooklyn College Field Nov. 26, 1949. Cleveland 3, Lafayette 2.

CLEVELAND. Aylmer; Dinkelacker, Thomann; Fleeter, Duffy, Schneider; Burgess, Lesseberg, Fox, Blomm, Walters.

LAFAYETTE. Herman; Rocco, Deliamides; Kaltsimidis, Palmieri, Memalhenn; Caruelli, Amiano, DiPace, Scaurfi, Druckman.

Goals: Cleveland, Blomm, Lesseberg, Burgess; Lafayette, Scaurfi, Palmieri.

Casualties: Cleveland, Joe Singer; Lafayette, Wurdell, Rechereen, Piezzulli, Kaminsky.

WILLIAM H. MAXWELL TROPHY

New York City Championship

Boys 1, Cleveland 4, Commerce 3, Curtis 4, Erasmus 2, Jefferson 3, Lafayette 3½, Manual 8, Monroe 8½, Morris 3, New Utrecht 2.

1946	1921	1936
Morris	No Contest	Monroe
7 Manual	2 Morris	7 Manual
8 Manual	3 Erasmus	8 Jefferson
9 Manual	4 Morris	9 Monroe
10 Boys	5 Commerce	40 No Contest
11 Manual	6 Erasmus	1 Lafayette-Monroe
12 Manual	7 Jefferson	2 Monroe
13 Manual	8 Monroe	3 Cleveland
14 Manual	9 Monroe	4 Lafayette
15 Curtis	30 Jefferson	5 Lafayette
16 Curtis	1 New Utrecht	6 Lafayette
17 Curtis	2 Monroe	7 Cleveland
18 Commerce	3 Monroe	8 Cleveland
19 Commerce	4 Monroe	9 Cleveland
20 Curtis	5 New Utrecht	

FIFTH ANNUAL NEW YORK-PHILADELPHIA P.S.A.L. SERIES

Played LaSalle College Dec. 10, 1949. Philadelphia 3, New York 0.

PHILADELPHIA. Fowler; Kirnse, McMenamin; Oliver, Smith, Anderson. Parker, Dunn, Casey, Didriksen, Palladino. Subs, Blasowski, Yarnall, Laney, Torian.

NEW YORK. Herman; Kern, Deliamides; Sullivan, Palmieri, Dierks; Gal-

Society for American Soccer History

lagher, Leseberg, Aniano, Schalier, Druckman. Subs. Buechelmaier, Tellini, Nagao, Chang.

Goals, Philadelphia. Packer, Casey. Referees: Major Norris, Ralph Rossner. Linesmen: Walter Lorenzo, Joseph Gervin.

PEVIOUS NEW YORK-PHILADELPHIA RESULTS

1945 Nov. 24	New York	1	Philadelphia	5	Northeast H. S. Phila.
1946 Dec. 14		4		1	Sterling Oval, New York
1947 Dec. 6		2		0	Cambria Stadium, Phila.
1948 Dec. 18		0		3	Brooklyn College Field
1949 Dec. 10		0		2	LaSalle Stadium, Phila.

ALL-SCHOLASTIC TEAMS

All-New York Public Schools

	First Team	Second Team
G	Don Hertan, Forest Hills	Stan Fertman, Lafayette
R.B.	Pete Kern, Brooklyn Tech	Don Vivchar, Forest Holls
L.B.	Hank Buechelmaier, Columbus	George Delianides, Lafayette
R.H.	Jim Sullivan, Stuyvesant	Bill Gallagher, Boys
C.H.	Vinnie Palmieri, Lafayette	Kurt Schneider, Cleveland
L.H.	Frank Rack,DeWitt Clinton	Paul Dierks, Brooklyn Tech
O.R.	George Loukas, Columbus	Joe Atkinson, Commerce
I.R.	Willie Schaller, Haaren	Ernest Acuna, Morris
C.F.	Fred Klomm, Cleveland	Joe Aniano, Lafayette
I.L.	Art Leseberg, Cleveland	Harry Theofanus, Bryant
O.L.	Herman Druckman, Lafayette	Henderson, Commerce

ALL-BROOKLYN (BROOKLYN EAGLE)

First Team. Fertman, Lafayette; Kern, Tech; Delianides, Lafayette; Gallagher, Boys; Palmieri, Lafayette; Dierks, Tech; Cannino, Bushwick; White, Tech; Aniano, Lafayette; Pinezich, Tech; Druckman, Lafayette.

Second Team. Altieri, Bushwick; Kovacs, Lafayette, Celusa, Erasmus; Kalinick, Lafayette; Gonzales, Midwood; Loften, Fort Hamilton; Saccoolita, Fort Hamilton; Bossenmeyer, Tech; Diaz, Manual; Scarfi, Lafayette; Scaninifi, Bushwick.

HONORABLE MENTION. Franco Boys; Menahem, Lafayette; Benson, Lincoln; Erani, Midwood; DiPace, Lafayette.

ALL-QUEENS (L. I. PRESS-L. I. STAR-JOURNAL)

Hertan, Forest Hills; Skolnick, Bryant; Wachter, Newton; Vivchar, Forest Hills; Schneider, Cleveland; Duffy, Cleveland; Cotumaccio, Newtwon; Leseberg, Cleveland; Klomm, Cleveland; Theofanus, Bryant; Selian, Forest Hills.

ALL-BRONX

Baumler, Clinton; Blummer, Science; Buechelmaier, Columbus; Casey, Morris; Rack, Clinton; Wilde, Columbus; Marino, Roosevelt; Murphy, Monroe; Loukas, Columbus; Acuna, Morris; Watnik, Clinton.

ALL-MANHATTAN

Diapnos, Haaren; Spring, Metal Trades; Stamler, Haaren; Violos, Commerce; Sullivan, Stuyvesant; Trunk, Aviation; Henderson, Commerce; Tellini, Stuyvesant; Atkinson, Commerce; Schaller, Haaren; Stoerzer, Stuyvesant.

Society for American Soccer History

ALL-NEW YORK PRIVATE SCHOOLS

FIRST TEAM. Ladd Merrick, S. I. Day; Tom Carroll, S. I. Day; Dan Fales, Kew-Forest; Nei Chang, Riverdale; Robert Bruckman, S. I. Day; Art. Feinstein, Poly Prep; Mike Lanes, Kew-Forest; Jack Purdy, Poly Prep; Robert Magao, Riverdale; Seilchi Yasumura, Horace Mann; Gonzalo Alvarez, Trinity.

INTER-CITY REPRESENTATIVES



Coached by Arthur Jacobs of Stuyvesant and Si Yudell of Lafayette, the New York All-Scholastic team lost the rubber game to Philadelphia at La Salle College Field.



Coached by Harry Smith, former U.S. Olympian, Philadelphia All-Scholastics made the count three games to two by defeating the New Yorkers 2-0 in the annual inter-city series.

Society for American Soccer History

SECOND TEAM. Charles Glanzer, Birch Wathen; Tom Siegel, Brooklyn Friends; Harold Wetter, McBurney; Carl Lecuffer, McBurney; Jack White, Poly Prep; Jack Eiselhart, Riverdale; Ket Richter, Birch Wathen; David Weisgal, Columbia Grammar; Robert MacGowan, Horace Mann; Sam Hopkins, S. I. Day; Don Fong, Riverdale.

ALL-NASSAU COUNTY PUBLIC SCHOOLS

Charles Weltner, Ed White, Andy Biache, Valley Stream; Don Anderson, Harry Repeta, Steve Kolockovsky, Glen Cove; Drew Lawrence, Bob Johansen, Buddy Griffin, Alex Pouschine, Dick Hartney, Sea Cliff; Bill Martin, Dick Spinner, Jim Corbridge, Bob Schlosser, Garden City; Don Moller, Carl Mueller, Ed McArdle, John Buchanan, Sewanhaka; Bob Multer, Great Neck; Jack Cebo, Manhasset; Russ Zaccaria, South Side.

ALL-SUFFOLK COUNTY

FIRST TEAM. Allan Rogers, C. Moriches; Dick Chamberlain, C. Moriches; Jerry Dietz, Bayport; Charles Jonathan, Bay Shore; Stan Swaine, C. Islip; Joe Cardamone, Bellport; Norman Stianson, Islip; Roland Sandberg, Ken Johnson, C. Moriches; Robert Hambley, Bayport; Jerry Wells, Mattituck.

SECOND TEAM. Tom Bieselin, Bellport; Bill Roder, Islip; Warren Magor, Mattituck; Roy Mulesky, C. Islip; Harry Baker, Islip; Seymour Davis, C. Moriches; Alan Mowbray, Joe Socozzo, Bay Shore; Carl Stelzer, Mattituck; Don Hamilton, C. Islip; Robert Lindgren, C. Moriches.

OHIO

AMERICAN SOCCER LEAGUE—By Edward Kozdron, Secretary

Secretary, Edward Kozdron, 6715 Snow Road, Cleveland 29.
President, Emil Klauss, 15019 Saranac Road, Cleveland 10
Vice-President, Harry Sheldon, 12440 Saywell Avenue, Cleveland 8.
Treasurer, Zoltan Greenhut, 1838 Coventry Road, Cleveland 1h.

CLUBS

Bartunek Clothes, Tony Jicha, 10414 Union, Cleveland 5.
Canton Span-American, Frank Arias, 523 Belden Avenue, Canton.
Greek-American, John Katsikos, 3325 Erin Avenue, Cleveland 13.
Greenhut Jewelers, Zoltan Greenhut, 1838 Coventry Road, Cleveland 18.
Heights Mannorchor, John Hergatt, 6714 Lawnview, Cleveland 3.
Lorain Co. Beverage, Clifford Woolridge, 2475 Garfield Blvd., Lorain.
Lorain Ger-American, Walter Neuber, R.D. 1, Vermilion.
Warren Moose Club, Emanuel Sferios, 156 Charles St., Warren.
Youngstown M.V., John White, 3635 Nielson Ave., Youngstown.

	P	W	L	T	P
Heights Mannorchor	14	12	1	1	25
Spanish-American	14	11	2	1	23
Bartunek Clothes	14	8	5	1	17
Greenhut Jewelers	14	8	6	0	16
Mahoning Valley	14	6	7	1	13
Moose Club	14	5	8	1	11
German-American	8	2	4	2	6
Greek-American	14	1	12	1	3
County Beverage	8	0	8	0	0

OHIO STATE CUP—Bartunek Clothes defeated Greenhut Jewelers in two games.

INDOOR TOURNAMENT—Bartunek Clothes defeated Spanish-American for the championship trophy.

Society for American Soccer History

PHILADELPHIA SOCCER LEAGUE

By William Rodgers, Secretary

First Division

First Half	P	W	L	T	P
Phoenix	9	7	1	1	15
Thomas Celtic	9	6	1	2	14
Viola	9	6	1	2	14
Ger.-Hungarian	9	4	3	2	10
Ken. Blue Bells	9	5	4	0	10
Phila. Hummers	9	2	4	3	7
Cardington	9	1	4	4	6
Lighthouse B.C.	9	2	5	2	6
Delpark	9	1	5	3	5
Juventus OSIA	9	1	7	1	3

Winner, Viola; Runner-up, Phoenix.

Second Half	P	W	L	T	P
Viola	8	7	0	1	15
Thomas Celtic	8	6	1	1	13
Ken. Blue Bells	8	5	2	1	
Lighthouse B.C.	8	3	2	3	
Phila. Hummers	8	3	3	2	8
Phoenix	8	3	4	1	7
Cardington	8	1	4	3	5
Ger.-Hungarian	8	2	6	0	4
Delpark	8	0	8	0	0

Second Division—North Section

	P	W	L	T	P
Kensington	7	7	0	0	14
Fairhill	7	5	2	0	10
Midway	7	5	2	0	10
Erzgebirge	7	4	3	0	8
Phoenix Res.	7	2	4	1	5
Richington	7	1	4	2	4
Germantown	7	1	5	1	3
Brit.-Americans	7	0	7	0	0

Winner, Kensington; Runner-up, Fairhill.

	P	W	L	T	P
Kensington	7	6	0	1	13
Fairhill	7	5	1	1	11
Midway	7	4	1	2	10
Erzgebirge	7	4	2	1	9
Germantown	7	3	4	0	6
Richington	7	1	4	2	4
Phoenix Res.	7	1	5	1	3
Brit.-Americans	7	0	7	0	0

Second Division—South Section

	P	W	L	T	P
Armenian Post	7	6	0	1	13
Linden	7	5	0	2	12
Passon	7	5	1	1	11
St. Lads YMCA	7	4	3	0	8
Brith Israel	7	2	4	1	5
British Legion	7	1	5	1	3
Phila. Hummers Res.	7	1	6	0	2
Phila. Ramblers	7	1	6	0	2

Winner, Armenian Post; Runner-up, Passon.

	P	W	L	T	P
Passon	7	6	1	0	12
Armenian Post	7	6	1	0	12
Linden	7	5	2	0	10
Phila Hummers Res.	7	4	3	0	8
St. Lads YMCA	7	3	4	0	6
Brith Israel	7	3	4	0	6
Phila. Ramblers	7	1	6	0	2
British Legion	7	0	7	0	0

Third Division

	P	W	L	T	P
N. E. Wanderers	7	7	0	0	14
Lawncrest	7	5	1	1	11
Fermantown B.C.	7	5	2	0	10
Eergebirge Res.	7	3	4	0	6
Valley Park	7	3	4	0	6
Juventus Res.	7	2	4	1	5
Phoenix Res.	7	1	6	0	2
L.R.B. Ambler	7	0	7	0	0

Winner, Northeast Wanderers; Runner-up, Germantown B.C.

* Suspended.

	P	W	L	T	P
Germantown B.C.	7	6	0	1	13
N.E. Wanderers	7	5	0	2	12
Lawncrest	7	4	2	1	9
Juventus Res.	7	4	3	0	
Erzgebirge Ress.	7	1	4	2	
L.R.B. Ambler	7	1	5	1	3
Phoenix Res.	7	0	6	1	1
*Valley Park	4	2	2	0	4

Society for American Soccer History

N.E. WANDERERS—UNDEFEATED CHAMPIONS



Back Row L. to R. — Fred Dredge, Manager; Peter Kovacs, Eugene Eisenmann, Otto Gessner, John Uphoff, Albert Booth, Albert Jones, Jack Talon, Mr. Harold Brigham, Asst. Manager.
Front Row L. to R. — Harry Schafer, Harold Greenley, David Gray, Joseph Hughes, Joseph Hinkle, Capt.; John Brigham, Alex Cooper, Warren Beideman, John Devine.

Junior Division

	P	W	L	T	P		P	W	L	T	P
Midway	8	7	0	1	15	Kensington Hts.	9	8	1	0	16
Erlen	8	6	1	1	13	Erzgebirge	9	7	1	1	15
Erzgebirge	8	6	2	0	12	Erlen	9	7	2	0	14
Kensington Hts.	8	4	1	3	11	Midway	9	7	2	0	14
Nicetown B.C.	8	4	3	1	9	Nicetown B.C.	9	4	4	1	9
Cardington	8	2	5	1	5	Germantown B.C.	9	3	6	0	6
Germantown B.C.	8	2	6	0	4	Northeast B.C.	9	2	6	1	5
Lighthouse B.C.	8	1	6	1	3	Lighthouse B.C.	9	2	7	0	4
Martin Center	8	0	8	0	0	Martin Center	9	1	7	1	3

Winner, Midway A.A.; Runner-up, Kensington Hearts.

Midget League

	P	W	L	T	P		P	W	L	T	P
Northeast B.C.	9	8	0	1	17	Northeast B.C.	9	8	1	0	16
Midway	9	7	1	1	15	Midway	9	7	2	0	14
*Lighthouse B.C.	8	6	1	1	13	Kensington Hts.	9	7	2	0	14
Kensington Hts	9	5	3	1	11	Erlen	9	6	2	1	13
Germantown B.C.	9	3	4	2	8	Richington	9	5	2	2	12
Nicetown B.C.	9	4	5	0	8	Martin Center	9	3	4	2	8
Richington	9	4	5	0	8	Germantown B.C.	9	2	5	2	6
Erlen	9	2	5	2	6	Olney B.C.	9	2	7	0	4
Martin Center	9	2	5	2	6	Nicetown B.C.	9	1	7	1	3
*Cardington	9	0	9	0	0						

Wiiner, Northeast B.C.; Runner-up, Midway A.A.
* Suspended.

Society for American Soccer History

GEORGE MACKAY CUP—Midway Midgets, Northeast Midgets.
WILLIAM PALMER MEMORIAL CUP—Fairhill S.C., Kensington Blue Bells.

PHILADELPHIA ALL-SCHOLASTICS

PUBLIC HIGH SCHOOLS

Warren Youngblood, W. Phila.; Siegfried Kirmse, Frankford; Robert Lamey, N.E.; Harry Smith, Germantown; Len Oliver, N.E.; Edward Tatoian, N.E.; Henry Talbot, W. Phila.; Robert Dunn, N.E.; Robert Casey, N.E.; Albert Didriksen, Frankford; Gene Palladino, Germantown.
HONORABLE MENTION—Moses Rice, Franklin; Ronald Solowitz, W. Phila.; Eugene Eisenman, Olney; Robert O'Neill, Central; Stanley Lev, S. Gratz; Tom Moffett, Mastbaum; James Contrevo, Bartram; Ilvio Dal Farro, Southern; James Gleason, Frankford; Jack Clark, Germantown; John Paesari, Roxborough; George Poppas, Bok.

INTER-ACADEMIC

James Ferguson, Fds. Select; Curtis Wood, Penn Charter; Thomas Saul, Gtn. Friends; Fred James, Episcopal; James Clark, Fds. Select; Richard Armstrong, Gtn. Friends; Bob Bookhammer, Haverford; Roland Addis, Episcopal; Dana Weeder, Penn Charter; Charlton Yarnall, Haverford; Howard Wolf, Gtn. Friends.
HONORABLE MENTION—George Lemmon, Haverford S.; George Spaeth, Gtn. Friends; Tom Crain, Gtn. Academy; Ted Hillesley, Gtn. Academy; Carl Steins, Fds. Central; Tom Driscoll, Penn Charter; Martley Deacon, Gtn. Academy.

SUBURBAN

John Carson, Abington; David Henderson, Haverford; Holland Moore, Lower Merion; Clyde Wilmeth, Lower Merion; Wm. Anderson, Haverford; Robert Weiss, Abington; Robert Dracup, Upper Darby; Walter Oswald, Abington; Sam Rennix, Lower Merion; Warren Harrop, Haverford; Wm. Toal, Haverford.
HONARABLE MENTION—Baylis Thomas, Lower Merion; Don Clark, Haverford; Rurger Van Zanten, Lower Merion; Wayne Cunningham, Abington.

INDEPENDENT

Robert Fowler, Westtown; David Webster, Hill School; John McMenamin,, N. Catholic; Don Watts, George School; John Kelly, Girard Coll; Stanley Blazowski, Girard Coll.; Daniel Stella, Girard Coll.; Robert Albright, Girard Coll.; Richard Packer, George School; Jack Cannon, Morrestown Fds.; Manuel Corao, Hill School.
HONORABLE MENTION—Robert Dodge, Hill School; Darold Williamson, Girard Coll; Louis Matlack, Moorestown Fds.; Ken Burton, George School; Earl Harrison, Westtown; Joe Hughes, N. Catholic; Wylie Morris, Morrestown Fds.

* * *

The long standing world's record attendance of 149,547 at a Scottish-English international game in Glasgow in 1937 went overboard at Rio de Janerio when attendances of 150,000, 155,000 and 170,000 were reported at three games within eight days in the final rounds.

Society for American Soccer History

WESTERN PENNA. S.A.—By HARRY H. FAIRFIELD, Sec.-Treas.



Harry H. Fairfield

Western Pennsylvania enjoyed another banner season in 1949-50 with 52 clubs enrolled in six circuits.

Including district activity in national tournaments, 545 games, exclusive of friendlies, were played.

West Penn teams played conspicuous parts in the National Open, National Amateur and National Junior competitions.

Although shorn of the National Open title it won in 1948-49, Morgan battled its way to the Western Finals before being eliminated by the St. Louis Simpkins, 4-1 in St. Louis and 2-0 at Bridgeville, near Pittsburgh, Pa. Morgan was not up to its previous season's strength and will have to be rebuilt if it seeks to make further impression in 1950-51.

Harmarville, a newcomer to major league ranks and playing its first season in the Keystone League, carried through to the National Amateur final, in which it was defeated by the famed Ponta Delgada crew of Fall River, Mass., at Bridgeville, 4-1, after holding Delgada in a surprise scoreless game at Fall River, Mass.

Heidelberg Juniors, always a strong National Junior contender, went through to the western final of this event to be whipped, 6-1, in St. Louis by the Seco team.

In district league play, Morgan won the Keystone League title; Gratztown captured the Westmoreland County crown; Acmetonia won the Allegheny Valley League championship by one point over Russellton; Gallatin repeated in Section 1 of the Washington County League and ultimately won the playoffs, while Monongahela supplanted Dunlevy as Section 2 titlist. Morgan Juniors romped away with the Junior League championship, besides capturing the West Penn Junior Cup.

A perfect season for Morganites was spoiled in the West Penn Senior Cup final when, due to the lateness of the season and the necessity for deciding the championship, Harmarville was awarded the title by the margin of eight corner kicks to Morgan's seven in the third and final game after three deadlocks on goals, 2-2, 1-1, 2-2. The third game was played to 150 minutes.

Morgan Juniors also won its West Penn Junior title on corner kicks, five to four, after it had battled Heidelberg to a 1-1 count on goals in extra time.

The Jonkoping team of Sweden appeared here on June 14 and won a fine contest over the West Penn All-Star team, 7-3, in Brentwood Borough Stadium.

KEYSTONE LEAGUE

	P	W	L	T	P
Morgan	14	12	2	0	24
McConnells	13	8	3	2	18
Heidelberg	13	9	4	0	18
Harmarville	12	7	3	2	16
Cecil	13	4	5	4	12
Moon Run	14	3	7	4	10
C. Shannon	13	2	8	3	7
Curry	14	0	13	1	1

Society for American Soccer History

ALLEGHENY VALLEY LEAGUE

	P	W	L	T	P
Acmetonia	14	12	2	0	24
Russellton	14	11	2	1	23
Beadling Reds	14	5	5	4	14
Horning	14	7	7	0	14
Bairdford	14	5	7	2	12
Aliquippa	14	4	6	4	12
Indianola	14	3	9	2	8
New Kensington	14	1	10	3	5

Acmetonia defeated Russellton 2-0 to win league and cup playoff titles.

WASHINGTON COUNTY LEAGUE

Section 1	P	W	L	T	P
Gallatin	21	17	1	3	37
Beadling	22	13	4	5	31
Avella	22	11	7	4	26
Avella	22	11	7	4	26
Sturgeon	21	11	7	3	25
Line Hill	21	10	8	3	23
Bishop	21	10	8	3	23
Muse	22	8	9	5	21
Burgettstown	20	8	10	2	18
Canonsburg	22	5	15	2	12
Arden	22	4	16	2	10
Racoon	22	1	19	2	4

Section 2	P	W	L	T	P
Monongahela	18	17	0	1	35
Dunlevy	18	14	1	3	31
Roscoe	18	12	3	3	27
Van Voorhis	18	10	7	1	21
Donora	18	7	9	2	16
Cokeburg	18	7	10	1	15
New Eagle	18	3	11	4	10
Marianna	18	4	12	2	10
Hazel Kirk	18	4	12	2	10
Vestaburg	18	2	15	1	5

Gallatin defeated Dunlevy in the finals 1-2, 2-0, 3-1 to win the championship.

WESTMORELAND LEAGUE

	P	W	L	T	P
Gratztown	18	14	2	2	30
Keystone	15	10	2	3	23
Rillton	14	8	5	1	17
Lowber	14	5	9	0	10
Fitz Henry	17	2	10	5	9
Sunset	18	1	12	5	7

Rillton defeated Keystone 1-1, 2-1 to win playoff final.

JUNIOR LEAGUE

	P	W	L	T	P
Morgan	14	13	1	0	26
Moon Run	13	7	3	3	17
Heidelberg	12	7	3	2	16
Cuddy	13	6	5	2	14
Bethel	12	6	6	0	12
C. Shannon	12	3	8	1	7
Harmarville	12	2	10	0	4
Sturgeon	13	2	11	0	4

WASHINGTON COUNTY LEAGUE—5th Annual, Section 1 defeated Section 2, 3-1 at Fair Hope, Pa.
WESTMORELAND MARCH OF DIMES—East 1, West 1.
NATIONAL JUNIOR CUP—West Penn final. Heidelberg 1, Castle Shannon 0.
NATIONAL CHALLENGE CUP—West Penn final. Morgan 2, McConnell 1.
NATIONAL AMATEUR CUP—West Penn final. Harmarville 2, Castle Shannon 0.
WEST PENN JUNIOR CUP—Morgan 1-5c, Heidelberg 1-4c.

SOUTHERN NEW ENGLAND

By William Morrissette

SECRETARY—Wm. Morrissette, 609 Eastern Ave., Fall River, Mass.
PRESIDENT—Thos J. Mulvey, Sr., 135 N. William St., Fairhaven, Mass.
1st V. PRESIDENT—Manuel M. Oliveira, 67 Furnace St., Providence, R. I.
2nd V. PRESIDENT—Alvarinho S. Mello, 145 Choate St., Fall River, Mass.

Society for American Soccer History

3rd V. PRESIDENT—Joseph Cordeiro, 54 Rotch St., Fairhaven, Mass.
TREASURER—Milton T. Weaver, 33 Arlington St., New Bedford, Mass.



Wm. Morrissette

The climax of 1949-50 for Southern New England soccerdom was, no doubt, the return of the National Amateur championship to this district with the crowning of the Ponta Delgadas as national champions for the fourth time in five years and the fifth time since 1938.

This climax, however, was not one to which Southern New England was unaccostumed. The success of Ponta Delgadas marked the tenth time in the 27-year history of the National Amateur Cup Competition that the crown was annexed by a team in the Southern New England district. The 1949-50 season was also the 17th in which this district was represented in the grand final.

Soccer fans of Southern New England are proud, and justifiably so, of this record, and Fall River soccerites are particularly proud of the fact that their city has been the home of the National championship nine times and that it has had 11 grand finalists.

The achievement of the Ponta Delgadas was all the more glorious when it is taken into consideration that the club also reached the grand final of the National Open Challenge Cup Competition for the third time in five years.

CHAMPIONSHIP TOURNAMENTS

During the 1946-47 season the Southern New England S.F.A. decided to cancel the several association-wide cup tournaments then in vogue and substitute a single association-championship competition, divided into two sections, one for senior teams and the other for teams in an Intermediate Division which has an age limit of 21.

Young Nationals of Fall River won the 1949-50 title for the seniors and St. Michaels, also of Fall River, copped the Intermediate crown, repeating their triumph of the preceding season. Liberals of Fall River were the 1948-49 winners in the senior group.

Cranston, (R. I.) won the senior title in its initial year of competition and Park Cash Market of New Bedford took the honors in 1947-48. In the Intermediate grouping Lincoln Juniors of Fall River were the 1946-47 titlists and the Jeffersons, also of Fall River, took the crown the following year.

The winners are presented the George Ritchie Memorial Plaque dedicated to the memory of the late George Ritchie who served the Southern New England as its secretary from its foundation in 1913 until illness forced his retirement in 1944.

NATIONAL S.L. OF NEW ENGLAND—By Manuel M. Oliveira

SECRETARY—Manuel M. Oliveira, 67 Furnace St., Providence, R. I.
PRESIDENT—Herbert F. Murray, Sr., 25 Fenner St., Providence, R. I.
TREASURER—Manuel B. Souza, 537 Lafayette St., Somerset, Mass.

Society for American Soccer History

Highlight of the 1949-50 season was the crowning of the Lusitanos S.C., of Ludlow, Mass., as the loop's new champions.

The Lusitanos, who went through their league schedule undefeated although once-tied, displaced the Ponta Delgadas who had won the league championship three years in a row following organization of that circuit in September 1946. The Ponta Delgadas tied with the Fall River S.C. for second place.

	P	W	L	T	F	A	P
Lusitanos	7	6	0	1	20	9	1
Ponta Delgadas	6	3	2	1	16	13	
Fall River S.C.	8	3	4	1	17	17	7
Fairlawn Rovers	5	1	3	1	8	11	3
New Bedford	6	1	5	0	8	19	2

Chief rivalry in the league was between the Lusitanos and the Ponta Delgadas. The defending champions lost their home opener to the Lusitanos and tied the new champions on the latter's grounds.

In individual performance Lou Domingoes (Lusitanos) and John 'Clarkie' Souza (Ponta Delgadas) with eight goals each were tied for scoring honors. John Bento (Fall River) was next with six goals. Antone Almeida (New Belford) netted five goals to take fourth place and three players, Art Moraes and Antonio Francisco (Lusitanos) and Ed Souza (Ponta Delgadas), tied for fifth place with four goals each.

FALL RIVER DISTRICT S.L. AND INTERMEDIATE S.L.

By William Morrissette

SECRETARY—Wm. Morrissette, 609 Eastern Ave., Fall River, Mass.
PRESIDENT—Vincent Costa, 96 Canonicus St., Fall River, Mass.
VICE PRESIDENT—Alvarinho S. Mello, 143 Choate St., Fall River, Mass.

The keenest competition in the entire Southern New England District during the 1949-50 season was centered in the Fall River District Soccer League with its Intermediate affiliate a close second for the honor.

Playoffs were necessary in both leagues to decide the eventual winners and the ties even extended to the race for individual scoring honors in each league.

Young Nationals, who had won the District League title in 1947-48 but did not compete the following season, won the championship again this year but the goal that gave them the crown was not scored until less than three minutes of play remained in the third and deciding game of their playoff series with St. Johns.

Young Nationals and St. Johns finished their season with identical records of 11 wins, two ties and one loss for 24 points. These two well-balanced elevens were so well matched that in six encounters each won three and each scored seven goals against the other.

Attract 5500 in First Encounter

They first met in a league game at Ruggles Park, Fall River, a public park. Both teams went into this contest undefeated. St. Johns had been tied once in nine starts and Young Nationals twice in eight.

The competition between these two teams had stirred up considerable interest and their impending first clash had received excellent newspaper and radio publicity. When the teams took the field for their first meeting of the season some 5500 fans jammed every nook and corner

Society for American Soccer History

of the park. The turnout was the largest at a game on a public park in more than 10 years.

The crowd was very orderly and witnessed what is generally rated the best soccer game of the season in Fall River. In spite of the obvious tension the players were well-behaved. St. Johns nosed out the Young Nationals, 1-0, but in the return engagement were blanked, 2-0. The teams next met in the first round of the Thomas Chew Memorial Cup with St. Johns eliminating the Young Nationals, 3-1. They next met in the League playoff series, the opener going to the Young Nationals, 2-1, the second game to St. Johns, 1-0, and the deciding tilt to the Young Nationals, 2-1.

St. Michaels Intermediate Champs

St. Michaels, who had finished one point out of first place the preceding season, won the championship of the Fall River Intermediate League.

The league operated a split schedule. St. Michaels won the first half title by defeating the Young National Juniors in the final game of the first-half schedule but were tied by the Young National Juniors and the Crusaders, a neighborhood rival, in the final standings of the second half.

Drawn to meet the Crusaders in the first game of the second-half playoff the Young National Juniors won this game by forfeit and then defeated St. Michaels, 3-1, to win the second half championship and force a playoff for the league title.

St. Michaels and Young National Juniors battled to a scoreless tie in the game to decide the Intermediate champion. In the replay, St. Michaels shaded their rivals, 2-1. Somewhat like the District League playoffs the Intermediate loop's playoff went to a wire-finish St. Michaels scoring their winning goal less than three minutes from the final whistle.

FALL RIVER DISTRICT LEAGUE

	P	W	L	T	F	A	P
*Young Nationals	14	11	1	2	42	20	24
*St. John's	14	11	1	2	43	17	24
Liberals	11	5	4	2	31	19	12
Portugese Sports	13	3	5	5	14	19	11
V.F.W.	13	4	7	2	21	34	10
Lincolns	14	3	8	3	30	29	9
Holy Ghost (Attleboro)	13	3	7	3	15	29	9
Somersets	14	2	9	3	20	49	7

* Playoffs—Young Nationals 2-0-2, St. John's, 1-1-1.

FALL RIVER DISTRICT INTERMEDIATE LEAGUE

First Half

	P	W	L	T	P
St. Michaels	10	9	1	0	18
Young Nationals Jrs.	10	8	1	1	17
Holy Ghost Jrs.	9	3	5	1	7
Crusaders	9	3	5	1	7
Don Luiz	10	1	7	2	4
Moderns	8	1	6	1	3

Second Half

	P	W	L	T	P
*St. Michaels	10	6	2	2	14
*Young Nats. Jrs.	10	6	2	2	14
*Crusaders	10	7	3	0	14
Don Luiz	10	5	4	1	11
Holy Ghost Jrs.	10	3	6	1	7
Moderns	10	0	10	0	0

* Sesond Half Playoffs—Crusaders forfeited. Young Nationals 3, St. Michaels 1.

League championship playoff—St. Michaels 0-2, Young Nationals 0-1.

Society for American Soccer History

GOALSCORERS

DISTRIST LEAGUE—Edmund Furtado, Young Nationals; Edward Pedro, Young Nationals 12; Daniel Pimental, Nationals; Arthur Silvia, Liberals 8; Arthur Medeiros, Liberals; Edward Cordeiro, V.F.W.; Antone Santos, Lincolns, 7; Angelo Pereira, St. Johns; Arthur Rezendes, St. Johns; Fred Chlebek, St. Johns; Albert Bernardo, Lincolns, Manuel Silvia, Portugese Sports, 6.

INTERMEDIATE LEAGUE—Arthur Rapoza, St. Michaels; James Re[illegible] Young Nationals, 15; Michael Krowetz, St. Michaels, 12; Maxim[illegible] Saraiva, St. Michaels, 11; Ernest Alexander, Young Nationals; Edward Freitas, Young Nationals; Arthur Medeiros, Don Luiz, 8; Fred Borges, Young Nationals; Norman Alves, St. Michaels; Herman Carvalho, St. Michaels; Richard Rodriques, Crusaders, 6.

THOMAS CHEW MEMORIAL CUP

St. Johns, who missed out on the Fall River District League crown after a tight playoff series with Young Nationals, won the trophy in a competition open only to teams of the Fall River District League.

Donated by Walter C. Fraze, Fall River sporting goods dealer, the trophy was presented to the league in memory of the late Thomas Chew, for many years superintendent of the Fall River Boys Club.

To gain permanent possession of the trophy a club has to win it three times, not necessarily consecutive. The Italian Progressives won it in 1947-48, the first year it was placed in competition, and again in 1948-49. They did not field a team in 1949-50, and its players virtually all signed with St. Johns.

NEW BEDFORD CITY S.L. and INTERMEDIATE S.L.

By James Renwick

CITY LEAGUE

SECRETARY—James Renwick, 17 Jouvette St., New Bedford, Mass.
PRESIDENT—Arnold Carlson, 115 Grinnel St., New Bedford, Mass.
VICE PRESIDENT—Anthony Affonce, 71 Weeden Rd., Fairhaven, Mass.
TREASURER—Thos. J. Mulvey, 135 N. William St., Fair Haven, Mass.

INTERMEDIATE LEAGUE

PRESIDENT—Gilbert Cabral, 161 Cottage St., New Bedford, Mass.
TREASURER—John Pimental, 24 Cottage St., New Bedford, Mass.
ARBITRATION BOARD—
Wiliam Marcell, 208 Rivet St., New Bedford, Mass.
William Medeiros, 102 Davis St., New Bedford, Mass.
Nelson Woodridge, 3 Nelson St., New Bedford, Mass.

CITY LEAGUE

	P	W	L	T	F	A	P
*Panther	12	9	1	2	30	16	20
Peaches Cafe	12	6	4	2	21	17	14
Washington	12	5	4	3	27	26	[illegible]
Dreadnaught	12	2	6	4	20	26	8
Park Cash Market	12	1	8	3	8	21	4

*City Champion for the fourth successive year, Dreadnaught won the Eddie Veira Trophy in the playoffs.

Society for American Soccer History

INTERMEDIATE LEAGUE

	P	W	L	T	P		P	W	L	T	P
Peaches Cafe	18	17	0	1	35	Crescents	17	2	11	4	8
S. End Hoboes	18	11	4	3	25	Panther	14	1	10	3	5
Lincoln Jrs.	17	10	4	3	23	Martin Clothiers ..	8	0	6	1	1

RHODE ISLAND INTER-CITY LEAGUE

SECRETARY—Anthony Piccione, 545 Dyer Ave., Cranston, R.I.
[redacted]E PRESIDENT—Alexander Pannozzo, 10 Africa St., Providence, R.I.
TREASURER—Norbert Mendes, 112 Sheldon St., Providence, R.I.

SOUTHERN NEW ENGLAND GROUNDS AND LOCATIONS

Attleboro

FATHER SULLIVAN FIELD—Inquire for Holy Ghost R.C. Church.

Fall River

All travel directions from City Hall.
FALL RIVER STADIUM—Pleasant St. Pleasant St. bus passes stadium.
FATHER KELLY PARK—S. Main & Globe. Main & S. Main via Broadway busses to ground.
LAFAYETTE PARK—Eastern Ave. & County St. Bedford-County bus to park.
LIBERAL FIELD—Laurel St. Laurel St. bus to field.
RUGGLES FIELD—Pine St. Robeson St. bus to Pine St.

Ludlow

FRANKLIN FIELD.

New Bedford

All grounds reached by bus service from center of city.
NORTH END—Brooklawn Park.
SOUTH END—Acuhsnet Field, Ashley Park, Fort Rodman, Page Mill Lot, Victory Park.

Rhode Island

J. & P. COATS FIELD—Lonsdale Ave., Pawtucwet. Lonsdale Ave. bus to feld.
PONTA DELGADA STADIUM—Shrove St., N. Tiverton. Three blocks from R. I.-Mass. State line.
VETERANS MEMORIAL FIELD—Gano St., Providence. Several bus lines pass near field.

Somerset

PIERCE FIELD—South St. near Riverdale Ave.

TEXAS SOCCER ASSOCIATION—By Al Collins

This association closed one of its most successful seasons. Mulhouser won both halves of the schedule and are city (Dallas) champions. A pre-season six-a-side tournament was won by the Bob Burns Hatters.

Much progress was made in junior promotion in Fort Worth, Tyler [redacted] Wichita Falls. A surprisingly good grasp of the sport's fundaments [redacted] exhibited by the six teams in the Dallas Junior League. Longfellow Jets, coached by Archie Porter, won the championship by defeating the Aldersgate Methodists, coached by J. A. Oktes, 2-0, after two games and three overtime periods. A six-a-side pre-season tournament was won by Christ Episcopals.

Society for American Soccer History

DALLAS LEAGUE

	P	W	L	T	P
Ralph J. Mulhouser	6	5	0	1	11
Bob'Burns Hatters	6	1	2	3	5
Chance Vought	6	2	3	1	5
Alpine Sportswear	6	1	4	1	3

NORTHERN DIVISION

	P	W	L	T	P
Sam Houstons	3	3	0	0	6
Longfellow	5	2	3	0	4
Obediah Knights	2	1	1	0	2
Maple Lawns	2	0	2	0	0

WASHINGTON STATE F.A.—By Vic Weston, State Secretary

Secretary, A. V. Weston, 4803 Donovan St., Seattle. Lander 3756.
President, T. P. Everham, 13637 1st. S.W. Seattle. Logan 0718.
V. President, L. B. Peery, 6316 Woodlawn Ave., Seattle. Vermont 5622.
Jr. Comm. G. P. Kempton, 328 Second Ave. N., Seattle 9. Garfield 8470.

The State Challenge Cup was won by Acme-tyee team and Matheny & Bacon won the first and second halves of the league to capture the pennant. The Associated Boys' Club League was won by Fremont and the Brown Brothers Cup is held jointly by the Lake City and Wallington teams who played to a tie in the final. Ehe Parochial League, comprising two divisions of nine teams each, was won by St. Anne, winner of the South Division, which defeated St. Patrick, winner of the North Division, 1-0 in the playoff.



Miss Betty (Gorgeous) George, no relation to the wrestler, and Benny Baker, stars of the Chicago "Kiss Me Kate" show display some fancy "leg work" in preparation for a guest appearance at the Windy City Indoor tournament.

Society for American Soccer History

1950 U.S. TEAMS ABROAD

GERMAN-AMERICAN LEAGUE ALL-STARS (N. Y.) TO GERMANY

Played 8 Lost 7 Tied 1. Goals 9 against 36.

Scorers, Chacurian 4, Healy 2, Blaeser, Ramsden, Hamburg own goal.

Seppl Antretter, Eintracht; Walter Badzinsky, Elizabeth; Fritz Blaeser, New York; Efrain Chacurian, Swiss; Felix Goldstein, Hota; Herman Graesser, New York; John Healy, German-Hungarian; Henry Hummel, Elizabeth; Tony Laub, New York; Eddie Oakes, Eintracht; Leo Scherer, New York; Billy Sheppell, Newark; Eric Smerks, New York; Jack Young, Swiss; Bernard Ramsden, Player-Manager; August Steuer, Director; Henry Haarer, Treasurer.

Aug 12	German-American League	3 Hamburg	9 Hamburg
13		0 Werder	7 Bremen
19		2 Union '06	4 Berlin
23		2 Vf R	2 Mannheim
24		1 Vf B	4 Stuttgart
26		1 Vf B Aalen	4 Aalen
27		0 Victoria	3 Aschassenburg
30		0 Fortuna	3 Duesseldorf



THE TOURISTS. Back Row L. to R. — Eric Smerkis, Eddie Oakes, Seppl Antretter, Felix Goldstein, Henry Hummel, Tony Laub, Bernhard Ramsden. Center, L. to R. — Fritz Blaeser, John Healy, Billy Sheppell, Efrain Chacurian, Herman Graesser. Front L. to R. — Leo Scherer, Jack Young, Walter Badgzinsky.

Society for American Soccer History



A 65,000 Mexico City throng watches the colorful flag raising ceremonies before the first U.S.-Mexico game in the North American Zone championships.

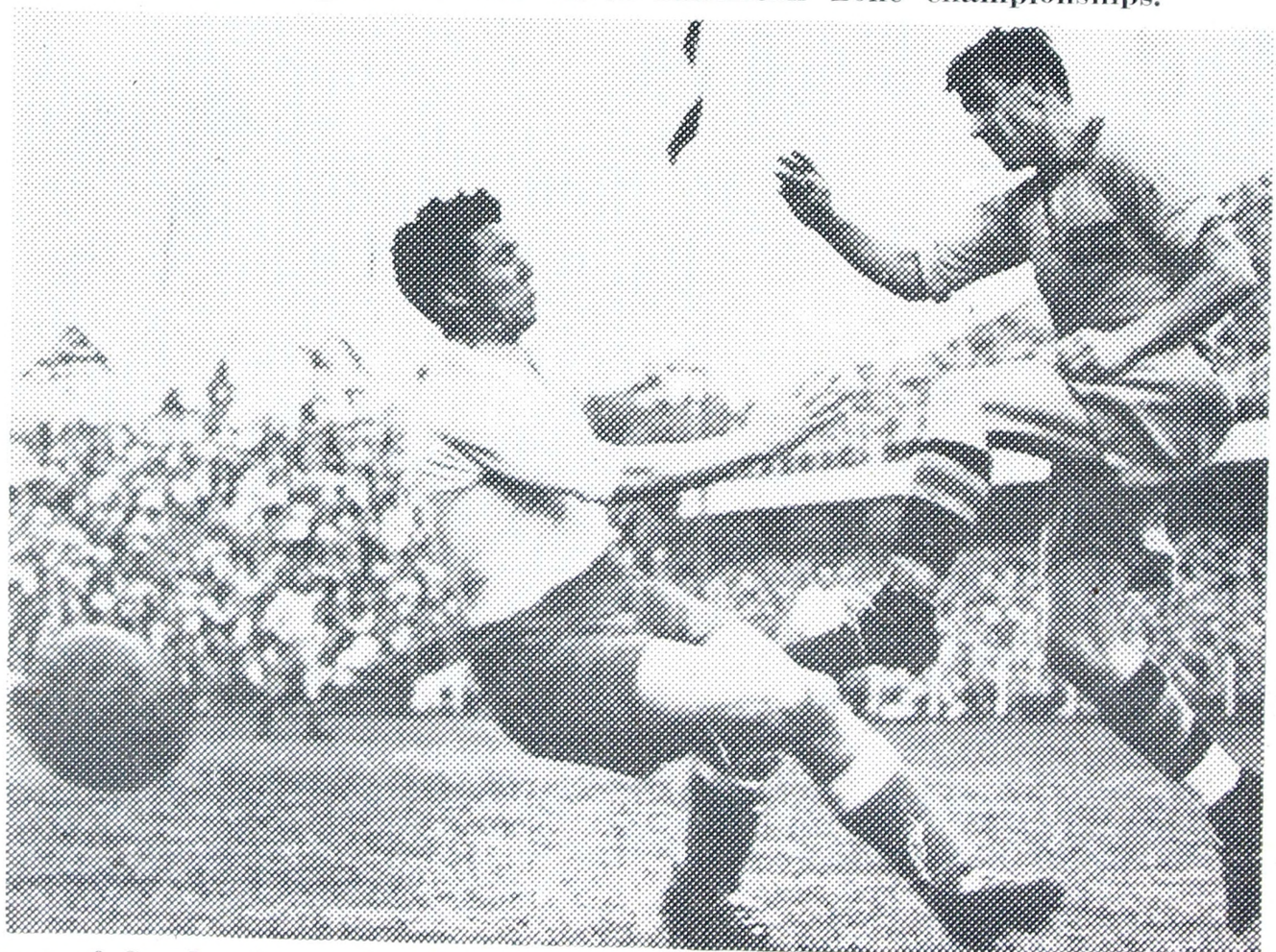

Nilsson of Sweden in scoring his team's third goal appears to be actually stepping on the knee of a Netherland's defender.

Society for American Soccer History

A SHOT HEARD AROUND THE WORLD



English Goalie Williams scrambles to catch the ball before it goes over goal line to register the world's soccer major upset. Joe Gaetjens of New York, not in picture, headed and deflected a shot by Walter Bahr of Philadelphia, past the surprised keeper.

TURK WINS BY A HEAD



By Gene Hunter, Courtesy St. Louis Post Dispatch.

The shin of Charlie Colombo (U.S.), makes contact with the chin of Bulent Esen of the Turkish Besiktas. Bulent beat Charlie by getting there first with a header.

Society for American Soccer History

1949-50 FOREIGN TEAM VISITS

1949 UNIVERSITY OF HAVANA

Played 5, Won 4, lost 1. Goals 12 against 5.

Orlando Alvarez, Jose Agullo, Roman Barros, Antonio Cotarelo, Oscar Dobarro, Jorge Davila, Bartolome Fernandez, Marcelino Gutierrez, Angel Illobre, Luis Lafuente, Enrique Pombo, Agustin Saez, Moises Sanchez, Antonio Fernandez Zas. Coach Jose Fersandez Miranda.

Univ. of Havana	5	Howard University	1	Washington D.C.
	2	Towson State Teachers	0	Baltimore, Md.
	4	R.P.I.	2	Troy, N.Y.
	0	Dartmouth College	2	Hanover, N.H.
	1	Univ. of Connecticut	0	Storrs, Conn.

HOWARD UNIV. — Peter Chen; Basil Keene, Hilton Clarke; Ronald Gordon, Upton Robotham, Hopeton Hibbert; Alvin Innocent, Auselm St. George, Fedo Blake, Ivan Ashtine, Neville Clark. Goals, Blake. Subs, Drissa Villa, Lincoln Ross. Referee, Robert MacFarland.

TOWSON — Geo. Kimmet; John Lowe, Howard Ritter; Henry Lichtfuss, Edward Leonard, James Gede; Gordon Reese, Jay Gernand, Elmer Dize, Alan Bryant, Donald Taylor. Subs, Dan Pickett, James Hottes, Jules de Fries, Referee, Tommy Amrheim.

R.P.I. — Roger Patron; Jan Ezra Petersen, Chuck Auguste; Dick Hartz, Ed Geissler, Jas Elmore; Andy Koefoed, A. L. Philbrook, Dick Secrest, Bob Lopes, Raza Akbar. Goals, Thisted, Walsh. Subs, Vigo Thisted, Joe Walsh, Bill Sibbers, Joe Manneleto, Otto Dernhoefer, Dave Johnston.

DARTMOUTH — Saxton; Fancher, Dore; Hart, Marhys, A. Estrada; *Thompson, Leshure, Hopkins, Judson, *Clark. Goals, Clark, Estrada. Subs,*Ringe. Referee David Cummings. *1950 Graduate.

CONNECTICUT — Abbott; *Salling, *Coholan; *Nerers, *Blozie, *Tedford; *Fetterolf, Higgins, *Cleveland, *Kirschman, *Baldwin. Subs, *Ohms, *Murphy, *Thompson, *Aborn, *Spencer. Referee, Albert Loeffler. *1950 Graduate.

1950—HAMBURG S.V. OF GERMANY

Played and Won 6. Goals 44 against 6. Arrived Idlewild Airport May 4. Left Idlewild Airport May 25.

Edmund Adamkiewicz, Erich Ebeling, Hans Frahm, Werner Gorska, Werner Harden, Herbert Klette, Manfred Krueger, Hans Kubsch, Friedrich Nieman, Joseph Posipal, Rolf Rohrberg, Wolfgang Seeger, Heinz Spundflasche, Heinz Trenkel, Walter Warning, Herbert Wojtkowiak, Paul Hauenschild, Hon Pres; Hans Ballin, v.p.; Paul Reyman, mgr.; George Knoepfle, coach. August Steuer, G.A.I. tour director.

May 7	Hamburg	4	German-American League	1	Randalls Island, N.Y.
12		7	Rochester All-Stars	2	Rochester, N.Y.
14		10	Chicago All-Stars	0	Chicago, Ill.
19		9	New Jersey All-Stars	1	Newark, N.J.
21		5	Philadelphia All Stars	0	Philadelphia, Pa.
23		9	Brooklyn All-Stars	2	Brooklyn, N.Y.

G.A.L. — Triboro Stadium. Goldstein; Young, Badgzinski; Antretter, Van Steen, Sheppell; Hummel, Healy, A. Hritz, Chacurian, S. Hritz. Goals,

Society for American Soccer History

A. Hritz. Subs, Oakes, Avis. Referee, August Schmitt. Linesmen, Ignatz Fischer, Robert Wagner.

ROCHESTER — Edgerton Park. Ted Bondi; Len Schantz, Milt Pierce; John Hogan, Jon DeVisser, Gene Nelson; John Karrer, Sparky Zubert, Bud Gray, Jim Bird, Oscar Reber. Goals, Gray 2. Subs, Rowan, Abrams, Reiber, Epperlein, Hackshaw. Referee, Ray Morgan (Canada). Linesmen, Henry Hoeher, James Williams.

CHICAGO — Soldier Field. Gino Gardassanich; Jeff Coombes, Bengt Rosenquist; Vladimir Juchvid, Kas Krol, Bengt Magnusson; Bohdan Kozan, George Ross, Pete Matevich, Adam Wolanis, Franz Eichinger. Subs, George Jacubil, Chester Iwanicki, Karel Tomanek, Bryan Halpin, Chico Martinez. Referee, Rudy Trautman. Linesmen, Fred Linstow, Otto Lenker.

NEW JERSEY — Newark Schools Stadium. Ardente; Sinsheimer, Strong; Smith, Geiger, Sheppell; Hummel, Gonsalves, Fisher, Kavanaugh, Lacko. Goals, McKenzie. Subs, Hanna, McKenzie. Referee, Sam Schofield.

PHILADELPHIA — Yellow Jacket Stadium. Yingling; R. Smith, Lidums; Follmer, Meith, Jacoby; Hughes, Johnstone, Pack, Grossmueller, Gormley. Subs, Ferko, Reid, Koehler, Noel, Schmitt, Christian. Referee, Harry Rodgers. Linesmen, Munyan, Elliott.

BROOKLYN — Dexter Park. Kleinberg; Canora, Flaherty; Maxwell, Van Steen, Krapf; Horowitz, Valtin, Lacko, Chacurian, Diller. Goals, Lacko 2. Subs, Spelitzer, Eder, Smerkis. Referee, Jim Stevenson. Linesmen, August Schmitt, Henry Moller.

	New York	Rochester	Chicago	New Jersey	Philadelphia	Brooklyn	Total Goals	Appearances
Adamkiewicx	X	3	4	3	—	3	13	5
Ebeling	X	X	1i	1i	1	1i	4	6
Frahm	—	—	S	X	X	X	—	4
Gorska	—	—	—	X	X	X	—	3
Harden	—	—	—	—	—	—	—	—
Klette	X	X	—	X	X	X	—	5
Krueger	1	X	2i	Xi	X	4	7	6
Kubsch	—	—	S	2	1	S	3	4
Niemann	X	X	—	2	X	X	2	5
Posipal	X	1	—	X	X	—	1	4
Rohrberg	2	1	1	X	2	—	6	5
Seeger	—	—	—	X	X	—	—	2
Spundflasche	X	X	1	1S	—	X	2	5
Trenkel	X	X	1	S	1	1	3	6
Warning	X	X	—	—	—	X	—	3
Wojtkowiak	1	2	—	—	—	X	3	3
TOTAL	4	7	10	9	5	9	44	—

S. substitute; i, injured and retired from game.

Society for American Soccer History

1950 — MANCHESTER UNITED OF ENGLAND

Played 12, Won 8, Lost 2, Tied 2. Goals 47 against 20. Arrived Queen May, N.Y. May 7. Left Queen Mary June 23.

Jack Aston, Jack Ball, Brian Birch, Tom Bogan, John Carey, Capt.; Allenby Chilton, Henry Cockburn, Jack Crompton, Jimmy Delaney, John Downie, Tom Lowrie, Tom Lynn, Charles Mitten, Tom McNulty, Stan Pearson, John Rowley, Jack Warner, Thos. Curry, Trainer; Matt Busby, Manager; Dr. Wm. MacLean, Director.

May 10	Manchester United	5	National League All-Stars	0 Toronto, Ont.
14		9	New York All-Stars	2 Randalls Island
17		2	New England All-Stars	0 Fall River, Mass.
21		2	Kearny-Phila Stars	2 Randalls Island
25		5	Simpkins F.C.	0 St. Louis, Mo.
31		7	Los Angeles "A" Stars	1 L. Angeles, Calif.
June 4		6	Atlas F.C. (Mexico)	6 L .Angeles, Calif.
7		2	Montreal All-Stars	1 Montreal, Que.
9		4	Jonkopping (Sweden)	0 Polo Grounds, NY
11		2	Besiktas (Turkey)	1 Kearny, N. J.
14		2	All-England	4 Toronto, Ont.
20		1	Jonkopping (Sweden)	3 Chicago, Ill.

TORONTO—Arends; Johnston, Graham; Syme, Phillips, McDowall; Wallace, Suttie, J. Davidson, Kennedy, Campbell. Subs, Flynn, Perritt, S.



BRITISH WONDER TEAM. Back Row L. to R. — Matt Busby, manager; John Carey, John Feehan, Allenby Chilton, Jack Compton, John Aston, Bill McGlen, John Curry, trainer. Front L. to R. — Henry Cockburn, Jim Delaney, Jack Warner, Jack Rowley, Stanley Pearson, Charles Mitten.

Society for American Soccer History

Davidson, Ptolomey. Referee, Ray Morgan. Linesmen R. Auld, C. Meldrum).

NEW YORK—Olaf; O'Connell, Watman; Anderson, Osowski, Granados; Hynes, Villanon, Gaetjens, Maca, Monsen. Goals, Maca, Gaetjens. Subs, Eisner, Finsterwald, Carro. Referee, Jas. McLean. Linesmen, E. Zammit, J. Morrison.

FALL RIVER—Romanowicz, Rego, Martin; Costa, Texeira, Bello; Aguiar, E. Souza, Domingos, J. Souza, Ferreira. Subs, F. Souza, Andrews. Referee, Fred Clark. Linesmen, Joseph Barboza, Michael Ward.

KEARNY-PHILA.—McPhail; Dick, Donald; McIlveney, Stark, Bahr; Campbell, Sheppel Kropfelder, Fraser, McLaughlin. Goals, Campbell, Sheppell. Referee, Sam Galin. Linesmen, A. Schmitt, W. Lyle.

SIMPKINS—Borghi; Galimberti, Annis; Desmuke, Colombo, Lange; Randazzo, Pariani, Bertani, Barrale, Wallace. Subs, McHugh, Marshak, Mugavero. Referee, Justin Keenoy. Linesmen, Harry Crawford, Harry Lyons.

LOS ANGELES A—Julio Alcantara; Sal Balderas, Al Garcia; Vic Cohen, W. Wolstencroft, Don Utchel; Jose Ruiz, Jose Noguera, Robt. Frasier, John Carruthers, Andrew Keir. Goals, Carruthers. Subs, Ray Stalmack, Oscar Kellerman, Chas. McGillivray. Referee, J. Streudle. Linesmen, J. Talmash, B. Lebo.

MONTREAL—Kaplan; Voce, J. Rose; Caplan, Froggatt, Gammon; McKenna, Menyes, S. Rose, McLachlan, McMahon. Goals, Menyes. Subs, Cunningham, Sinclair, McAuley. Referee, Doug Sparrow. Linesmen, Ed Larner, Bill Betts.

	Toronto	New York	New England	Kearny-Phila.	Simpkins	Los Angeles	Atlas	Montreal	Jonkoppings	Besiktas	All-England	Jonkoppings	Goals	Appearances
Aston	—	—	—	1	X	X	X	X	—	X	X	—	1	7
Ball	X	X	X	X	—	—	—	—	X	—	X	X	—	7
Birch	—	—	—	—	—	1	—	—	—	—	—	—	1	1
Bogan	—	1	X	—	—	—	—	X	1	—	X	—	2	5
Carey	X	X	—	—	X	X	X	X	X	X	—	X	—	9
Chilton	X	X	X	—	X	X	X	—	X	X	X	X	—	10
Cockburn	1	X	X	X	X	—	X	X	X	1	X	—	2	10
Crompton	X	X	X	X	X	X	X	X	X	X	X	X	—	12
Delaney	X	—	—	X	X	2	1	1	X	X	X	X	4	10
Downie	1	4	1	X	3	1	X	1	X	X	—	1	12	11
Lowrie	—	X	X	—	X	1	1	X	X	—	—	X	2	8
Lynn	—	—	—	X	—	X	—	X	—	—	—	—	—	3
Mitten	X	1	X	X	X	1	3	X	2	X	1	X	8	12
McNulty	—	—	X	—	—	—	—	—	—	—	—	—	—	1
Pearson	1	2	X	X	1	—	X	—	1	X	X	X	5	10
Rowley	2	1	1	1	1	1	1	X	—	1	1	X	10	11
Warner	X	—	—	X	—	—	—	—	—	X	X	X	—	5
Totals	5	9	2	2	5	7	6	2	4	2	2	1	47	—

Society for American Soccer History

1950 BESIKTAS F.C. OF TURKEY

Played 7, Won 5, Lost 1, Tied 1. Goals 27 against 10. Arrived Idlewild May 19, Left Idlewild June 15.

Recep Akiner, Mehmet Atcilar, Feyzi Buyukyelvrim, Tenas Casis, Fahri Conserver, Levon Ekenyan, Bulent Esen, Kemel Gulcelik, Sukru Gulesin, Ihsan Karayegit, Suleyman Saba, Huseyin Saygun, Dr. Verdii Tosuncuk, Kemal Unlu, Yavug Ureten, Kamil Uzulme, Sevket Yorulmaz. Sadreddih Ususlu, manager; Hakkj Yeten, secretary; Basri Butun, pres. Referees Ass'n; Hulusi Tulon, Napoleon Steryanopulo, directors; Eric Keen, coach.

May	21	Besiktas	5	New York Stars	3 Randalls Island, N.Y.
	24		1	New England Stars	1 Fall River, Mass.
	28		5	Chicago Stars	2 Chicago, Ill.
	31		5	U.S. Stars	0 St. Louis, Mo.
June	6		7	Philadelphia Stars	1 Philadelphia, Pa.
	9		3	American League Stars	1 Polo Grounds, N.Y.
	11		1	Manchester United	2 Kearny, N.J.



TURKISH CHAMPIONS. Back Row L. to R. — Suleyman, Recep, Bulend, Kamil, Fahri, Sukri. Middle — Ihsan, Huseyin. Front — Kemal, Mehmet, Verdii.

NEW YORK — Bryndza; O'Connell, Watman; Eisner, Barr, Osowski; Hynes, Villanon, Gaetjens, Erickson, Monsen. Gaetjens 3. Referee, Stevenson. Linesmen, Attard, Schofield.

NEW ENGLAND — Romanowicz; Rego, Martin; Costa, Teixeira, DeNardo; Aguiar, Ed. Souza, Domingos, Moraes, Ferreira. Goals, E. Souza. Subs, Andrews, Frank Souze. Referee, Tom Bowden. Linesmen, James Fox, Michael Ward.

Society for American Soccer History

CHICAGO — Joe Silovsky; Bengt Rosenquist, Jeff Coombes; Vladimir Juchvid, Dave Rarity, Walter Zaremba; George Ross, Karel Tomanek, Zoten Farkas, Adam Wolanin, Pete Matevich. Goals, Joe Gryzik, Tomanek. Subs, Henry Grabowski, Joe Gryzik, Phil Treitman, Bill Pawlek, Chester Iwanicki, Gino Gardassanich.

U.S. STARS — Borghi; Keough, Maca; McIlveney, Colombo, Bahr; Wallace, Pariani, E. Souza, J. Souza, McLaughlin. Subs, Annis, Desmuke, Coombes, Muniz, DiOrio, Craddock. Referee, Prudencio Garcia. Linesmen, Les Hatchard, Howard Blaisdell.

PHILADELPHIA — Scheurholtz; Dick, R. Smith; McIlveney, Reid, Bahr; Oliver, Johnston, Kropfelder, McLaughlin, Gormley. Goals, Bahr. Referee, Bill Rose. Linesmen, John Miller, Andy Stradan.

AMERICAN LEAGUE—McPhail; Dick, Donald; McIlveny, Maca, Bahr; Gormley, A. Sheppell, Gaetjens, McLaughlin, Monsen. Goals, Gaetjens. Referee, Fred Coggins. Linesmen, Charlie Ferro, Dan Lafferty.

	New York	Fall River	Chicago	St. Louis	Philadelphia	New York	Kearny	Goals	Appearances
Akiner	X	1	3	2	X	1	X	7	7
Atcilar	—	i	—	—	—	—	—	—	1
Buyukyelvrim	X	S	X	X	X	X	X	—	7
Cacis	X	—	X	—	—	—	—	—	2
Canserver	X	i	X	X	1	X	X	1	7
Ekenyan	—	—	—	—	—	—	—	—	—
Esen	3	X	X	X	3	X	X	6	7
Guleclik	—	—	S	—	—	—	—	—	1
Gulesin	2	X	1	2	2	1	1	9	7
Karayegit	X	X	X	X	X	X	X	—	7
Saba	X	X	1	1	1	1	X	4	7
Saygun	X	X	X	X	X	X	X	—	7
Tosuncuk	X	X	X	X	X	X	X	—	7
Unlu	X	X	X	X	X	X	X	—	7
Ureten	—	—	—	—	—	—	—	—	—
Uzulme	—	—	—	—	—	—	—	—	—
Yorulmaz	—	S	S	X	X	X	X	—	6
Totals	5	1	5	5	7	3	1	27	—

S, substitute; i injured and retired from game.

1950 ATLAS F. C. OF MEXICO

Played 5, Won 3, Tied 2. Goals 20 against 14.

Cubero 6, Manzotti 5, Castillas 4, Mercado 2, Gonzales, Noro, Novello. Jesus Aldrete, Lorenzo Carillo, Fidencio Castillas, Edwin Cubero, Guillermo Del Valle, Moises Estrada, Juan Gomez, Reymondo Gonzales, Luis Heredia, Edmundo Manzotti, Alberto Medina, Jose Mercado, Rodrigo Noriega, Juan Novo, Javier Novello, Antonio Ramos, Eduardo Valdatti, Trainer.

Society for American Soccer History

May	31	Atlas	3	Los Angeles B Stars	1 Los Angles, Calif
June	4		6	Manchester United	6 Los Angeles, Calif.
	8		1	Vancouver Stars	1 Vancouver, B. C.
	10		4	Vancouver Stars	3 Vancouver, B. C.
	18		6	San Francisco Stars	3 San Francisco, Calif.

LOS ANGELES B — Chas Lanz; Don Brough, Robt Keil, Oscar Sosa, Robt Quesada, Robt Nuno; Guilb Castruita, Chuck Brinkus, Joe Zomar, Sam McCord, David Anderson. Goals, McCord. Subs, Tom Lillie, Alex Gardie. Referee, A. Nudell. Linesmen, N. Slavin, F. Nussbaum.

VANCOUVER — Bob Newbold; Johnny Webber, Alan Sawyer; Wes Henderson, Nick Glover, Don Matheson; Denny Rogers, Doug Greig, Fred Whittaker, Dave Brown, Ivan Carr. Goals (1st game), Milligan, (2nd game), Brown 2, Greig. Subs, Wallace Milligan, Bill Smith, John Halley, Dave Cairns, Buster Cairns, Alex Reid, Ray Dixon. Referee, Dan Kulai. Linesmen, Frank Lee, Jumbo McLean, Bob Kelly.

SAN FRANCISCO — Harry Lis; Andy Boido, Raul Anaya; Enrique Barrilas, Luis Jimenez, George De LaRosa; Francis Granadino, Ian Campbell, Nacho Rojas, Otto Krawetz, Hommo zylker. Goals, Rojas 2, Zylker, Subs, Angelo Carmassi, Ed Gonzales, Jack Hacker, Jose Leon, Luis Montanez. Referee, Charlie Chetouti. Linesmen, Alex Ramirez, Joe Brown.

JONKOPPING F.C. OF SWEDEN

Played 10, Won 6, Lost 3, Tied 1, Goals 37 against 32.

Fred Anderson, Kurt Backstrom, Goran Berg, Gota Brink, Allan Broling, Bo Carlsson, Ivar Eidefjall, Ollie Friden, Birger Gustavsson, Gote Lindstrand, Une Ljus, Rune Persson, Arne Selemsson, Carl Simonsson, Karl Sjostrand, Gote Stahl, Kurt Svenson, Karl Stahl, manager; Gerhard Thursell, trainer.

June	9	Jonkoping	0	Manchester United	4 Polo Grounds, N.Y.C.
	11		5	American League	3 Kearny, N.J.
	14		7	Pittsburgh Stars	3 Pittsburgh, Pa.
	17		4	Chicago Stars	1 Chicago, Ill.
	18		9	St. Louis Stars	5 St. Louis, Mo.
	19		3	Manchester United	1 Chicago, Ill.
	28		1	All-England	7 Montreal, Que.
	30		1	National League	3 Toronto, Ont.
July	2		3	Lusitano	3 Ludlow, Mass.
	4		4	German-American League	2 New York City

AMERICAN LEAGUE—McPhail; Dick, Donald; McIlveney, Stark, Bahr; Campbell, Sheppell, Jennette, McLaughlin, Fraser. Goals, Lawrence 2, McLaughlin. Subs, Lawrence, Jennette, Diaz. Referee, Jas. Stevenson. Linesmen, E. Capozzi, H. McNulty.

PITTSBURGH—Malinoski; Bashor, Merovich; Puchany, Baxter, Chappel; Smith, DiOr.o, R. Craddock, Visnich Mitchell. Goals, DiOrio, T. Craddock, Grivnow. Subs, T. Craddock, Grivnow, Powell, Pitchok, Yakop. Referee, Pete Roman. Linesmen, John McFalls, Adam Mucci.

CHICAGO—Mottes; Matthews, Pawelek; Rosenquist, Rarity, Iwanicki; Zarytskyz, Ross, Gryzik, Matevich, Grabowski. Goals, Ross. Subs, Tomanek, Juchvil, Farkas, Treitman, Streng.

Society for American Soccer History

ST. LOUIS—Burkart; Fitzgerald, Keough; Desmuke, Kestler, Alberiel; Menloza, Connell, Wecke, Looby, Nuniz. Goals, Weigel 2, Nuniz, Connell, Mendoza. Subs, King, Weigel, Dolan. Referee, Howard Blaisdell. Linesmen, Jim Moore, Harry Vallina.

TORONTO—Arends; Graham, Perrett; Connelly, Syme, Butler; Wallace, Ptolomey, Davis, Kennedy, Campbell. Goals, Davis 2, Butler. Subs, Horski, Gow, Burgoyne, Flynn. Referee, Ray Morgan. Linesmen, Wm. Logan, A. Mason. Manager, W. Simpson.

LUDLOW—Vaz; D. Francisco, Bello; J. Francisco, Texeira, Garcia; A. Francisco, A. Costa, Domingos, F. Costa, Ferreira. Goals, Texeira, Perreira, A. Costa. Subs, Perreira, Silva, Fonte. Referee, Jas. Johnstone. Linesmen, Fiecha, Ihlstrom.

NEW YORK—Smerkis; Young, Badgzinski; Antretter, Sheppell, Scherer; Hummel, Healy, Sturgess, Avis, Chacurian. Goals, Hummel, Healy. Subs, Oakes, Ramsden, Graesser. Referee, Jos. Triano. Linesmen, August Schmitt, Sam Schofield.

	Manchester U.	American Lea.	Pittsburgh	Chicago	St. Louis	Manchester U.	All-England	Toronto	Lusitano	Ger.-American	Goals	Appearances
Anderson	—	1	X	1	X	1	X	—	X	X	3	8
Backstrom	—	—	X	X	X	—	—	—	—	—	—	3
Berg	X	X	2S	—	X	X	X	X	X	X	2	9
Brink	X	—	X	—	3	—	—	X	—	—	3	4
Broling	X	—	—	X	—	X	X	—	X	X	—	6
Carlsson	X	—	S	1	—	—	—	1	—	i	2	5
Eidefjall	X	X	2	X	2	X	X	X	X	—	4	9
Friden	—	X	X	X	X	—	—	—	—	—	—	4
Gustavsson	X	X	X	—	—	X	X	—	X	X	—	7
Lindstrand	X	X	X	X	1	X	X	X	X	X	1	10
Ljus	X	—	—	1	—	X	X	X	1	X	2	7
Persson	—	—	S	—	—	—	—	X	S	X	—	4
Selemsson	—	X	X	i	X	—	—	—	2	X	2	7
Simonsson	X	3	2S	1S	3	X	1	X	S	2	12	10
Sjostrand	X	X	X	X	X	X	X	X	X	X	—	10
Stahl	X	X	X	X	X	X	X	—	X	—	—	8
Svenson	—	1	1	—	—	2	X	X	X	2S	6	7
TOTALS	0	5	7	4	9	3	1	1	3	4	37	

S, substituted; i, injured and retired from game.

1950 ALL-ENGLAND

Played 11, Won 10, Tied 1. Goals 74 against 14. Arrived Montreal, Empress of Scotland May 17. Left Montreal, Empress of Canada June 23.

Bowyer (Stoke City), Ellerington (Southampton), Flewin (Portsmouth), Hagen (Sheffield Un), Hancocks (Wolverhampton), Hanson (Bolton Wand), Johnston (Blackpool), Lofthouse (Bolton Wand), Medley (Tottenham), Mil-

Society for American Soccer History

burn (Chesterfield), Mozley (Derby Co), Matthews (Blackpool), Russell (Wolverhampon), Sewell (Notts Co), Taylor (Fulham), Vaughan (Charlton Ath.), Wainwright (Everton), Ward (Derby County), H. H. Hughes, V.P.F.A.; A. H. Oakley, V.P.F.L.; Dawson (Grimsby Town) Trainer.

May	20	England	7	Montreal All-Stars	0 Montreal, Que.
	24		4	Toronto All-Stars	1 Toronto, Ont.
	27		19	Saskatoon All-Stars	1 Saskatoon, Sash.
	30		4	Vancouver All-Stars	4 Vancouver, B.C.
June	1		3	Victoria All-Stars	2 Victoria, B.C.
	3		7	Vancouver All-Stars	1 Vancouver, B.C.
	7		9	Calgary All-Stars	0 Calgary, Alb.
	14		4	Manchester United	2 Toronto, Ont.
	17		9	Windsor All-Stars	2 Windsor, Ont.
	18		1	U.S. All-Stars	0 Randalls Island, N.Y.
	21		7	Jonkoping (Sweden)	1 Montreal, Que.

At Winnipeg on June 10 the squad, aided by local reinforcements, was split into the Blue and White teams and played for the Flood Relief Fund. Blue 7, White 6.

MONTREAL — Kaplan; Cunningham, Rose; Sinclair Caplan, Serrati; McKenna, Menyes, McMahon, McLachlan, Horrocks. Referee, Tom Goring. Linesmen, Joe Williams, Herb Yarnell.

TORONTO — Arends, Graham, Perrett; Suttie, Syme, McDowall; Wallace, Roy, Ptolemey, Kennedy, Campbell. Goals, Ptolomey. Referee, Hugh McLean. Linesmen, Les Digby, Tom Lancaster.

SASKATOON — Bremner; Hawes, Smith; Crone, Johnstone, McInnis; Gill, Ward (Derby Co), Lofthouse (Bolton), Rivett, Sorfleet. Goals, Rivett. Referee, Jack Fraser. Linesmen, Bobby Reid, Johnny Wanstall.

VANCOUVER — Bobby Newbold; Johnny Webber, Alan Sawyer; Wes Henderson, Nick Glover, Don Mattheson; Denny Rogers, Doug Greig, Fred Whittaker, Dave Brown, Ivan Carr. Goals (1st game), Greig 2, Whittaker, Brown. (2nd game), Whittaker. Subs, Bill Smith, Wallace Milligan, Alex Reid, Dave Cairns, Buster Cairns. Referee, Dan Kulai. Linesmen (1st game), Jumbo McLean, Frank Lee. (2nd game), Bob Kelly, Eric Longhurst.

VICTORIA — Bill McAllister; Herman Henry, Murray Speller; Red McMillan, John Kennedy, Jack Robbins; Andy Anderson, Frank Grealey, Cedric Robb, Denny McGee, Ab Travis. Goals Robbins 2. Subs, Hope, Robinson, Day. Referee, George Barnes. Linesmen, Hank Casilio, Ed Ball.

CALGARY — Crowe; Skidmore, Dunlop; Owen, Sutherland, Laycock; Linder, Kerr, Gillings, Johnson, Marston. Referee, J. Taylor. Linesmen, P. Mitchell, J. Cummings.

WINDSOR — Ross; Syme, L. Heron; Spratt, Vidori, Clark; Walker, Vlajkovich, G. Heron, Kennedy, Campbell. Goals, Campbell. Referee, A. McDermott. Linesmen, W. Kay, J. Rodie.

U.S. — Borghi; Keough, Maca; McIlveney, Colombo, Bahr; Wolanin, J. Souza, Gaetjens, Pariani, Wallace. Subs, Craddock. Referee, Sam Galin. Linesmen, Eric Korf, Rudy Kuntner.

WHITE — Hanson; Fraser (Scottish), Ellerington; Johnston, Flewin, Milne

Society for American Soccer History

(St. James); Matthews, Wainwright, Lofthouse, Pennington (Scottish) Medley.

BLUE — Korchak (St. James), Milburn, Wedlake (St. James); Russell, Taylor, Ward; Carter (St. James), Bowyer, Vaughan, Hagen, Hancocks. Goals, White; Wainwright 2, Johnston 2, Medley, Pennington; Blue, Vaughan 3, Bowyer 2, Hagen 2. Subs, White; Donnett (Scottish) for injured Flewin. Referee, Cliff Dickens. Linesmen, Andy Bruce, Danny Hodgert.

	Montreal	Toronto	Saskatoon	Vacouver	Victoria	Vacouver	Calgari	Winnipeg	Manchester	Windsor	U.S.	Jonkopping	Goals	Appearances
Bowyer	2	—	4	X	—	3	—	2B	1	—	X	—	10	7
Ellerington	X	X	—	X	—	X	X	XW	X	X	X	X	—	10
Flewin	X	—	X	X	—	X	—	XW	—	—	X	X	—	7
Hagen	X	—	4	X	—	3	—	2B	1	X	X	—	8	8
Hancocks	2	—	3	4	X	X	—	XB	2	3	1	1	16	10
Hanson	X	X	X	X	X	X	X	XW	X	X	X	X	—	12
Johnston	X	X	—	X	—	X	X	2W	X	X	X	—	—	9
Lofthouse	3	—	—	X	—	1	—	XW	X	—	X	4	8	7
Medley	—	X	—	—	—	—	1	1W	—	X	X	1	2	6
Milburn	—	X	X	—	X	S	X	XB	X	X	X	X	—	10
Mozley	X	—	X	X	X	X	—	—	—	—	—	—	—	5
Matthews	X	X	—	X	X	X	X	XW	X	—	—	—	—	8
Russell	—	—	X	—	X	—	X	XB	—	X	S	X	—	7
Sewell	—	2	3	—	X	—	3	—	—	—	—	X	8	5
Taylor	—	X	1	—	X	—	X	XB	X	—	—	—	1	6
Vaughan	—	1	4	—	1	—	2	3B	—	3	—	—	11	6
Wainwright	—	1	—	—	2	—	3	2B	—	3	—	1	10	6
Ward	X	X	—	X	X	X	—	XB	X	X	X	X	—	10
TOTALS	7	4	19	4	3	7	9	—	4	9	1	7	74	

S—substitution; B—Blue team; W—White team.

Society for American Soccer History

1949 NATIONAL COLLEGIATE ATHLETIC ASSOCIATION

PRESIDENT

Dr. Karl E. Leib
State University of Iowa

HONORARY PRESIDENTS

Professor Charles W. Kennedy
Professor W. B. Owens
Professor Philip O. Badger
Wilbur C. Smith, M.D.

SECRETARY-TREASURER

Kenneth L. Wilson, Hotel Sherman, Chicago 1, Ill.

EXECUTIVE ASSISTANT

Walter Byers, Hotel Sherman, Chicago 1, Ill.

VICE PRESIDENTS

1st District	Lloyd P. Jordon, Amherst College
2nd District	Robert J. Kane, Cornell University
3rd District	Blake R. Van Leer, Georgia Tech.
4th District	L. C. Emmons, Michigan State
5th District	Earle Davis, Wichita University
6th District	C. E. Southern, Arizona State College
7th District	Leo. G. Provost, University of Utah
8th District	S.B. Freeborn, University of California

MEMBERS-AT-LARGE

Rev. John H. Murphy, University of Notre Dame
Col. Earl H. Blaik, U.S. Military Academy
J. H. Nichols, Oberlin College
A. B. Moore, University of Alabama
Capt. H. H. Caldwell, U.S. Naval Academy
Emil L. Larson, Border Conference
Alfred R. Masters, Stanford University

EXECUTIVE COMMITTEE

Asa S. Bushnell, Eastern College Athletic Conference
James H. Stewart, Southwest Conference
N. W. Dougherty, University of Tennessee
Hugh C. Willet, University of Southern California
E. LeRoy Mercer, University of Pennsylvania
Robert A. Fetzer, University of North Carolina
Reaves E. Peters, Missouri Valley Intercollegiate A.A.

SOCCER RULES COMMITTEE

William Jeffery, Pennsylvania State College, Chairman
L. E. Briggs, Massachusetts State College

Society for American Soccer History

J. H. Nichols, Oberlin College
J. J. Reed, Princeton University
Charles R. Scott, University of Pennsylvania
John Y. Squires, University of Connecticut

EDITOR OFFICIAL NCAA SOCCER GUIDE

Alfred E. Smith, Germantown Friends School, Philadelphia, Pa.

INTERCOLLEGIATE SOCCER FOOTBALL ASSOCIATION



George Van Bibber

PRESIDENT—George Van Bibber, University of Connecticut.
VICE PRESIDENT—Ivan Geiger, Massachusetts Inst. of Technology.
SECRETARY-TREASURER—Lawrence E. Briggs, University of Massachusetts.
ASSISTANT SECRETARY—Charles R. Scott, University of Pennsylvania.

MEMBERS

CALIFORNIA—University of California (Berkeley).
CONNECTICUT—Trinity College, University of Connecticut, Yale University.
DELAWARE—University of Delaware.
ILLINOIS—Wheaton College.
MARYLAND—Johns Hopkins University, Loyola College, Towson State Teachers, U.S. Naval Academy, University of Baltimore, University of Maryland, Wesley Junior College, Western Maryland College.
MASSACHUSETTS—Fitchburg State Teachers, Harvard University, Massachusetts Institute of Technology, Springfield College, Tufts College, University of Massachusetts, Williams College.
NEW HAMPSHIRE—Dartmouth College.
NEW JERSEY—Panzer College, Princetown University, Seton Hall College, Stevens Institute of Technology.
NEW YORK—Brooklyn College, Brockport State Teachers, Buffalo State Teachers, Colgate University, Cornell University, Cortland State Teachers, Hamilton College, Ithaca College, Oswego State Teachers, Pratt Institute, Rensselaer Polytechnic Institute, Syracuse University, U.S. Military Academy.
NORTH CAROLINA—Duke University, High Point College, University of North Carolina.
OHIO—Oberlin College.
PENNSYLVANIA—Allegheny College, Bloomsberg State Teachers, Bucknell University, Drexel Institute of Technology, East Stroudsburg State Teachers, Gettysburg College, Haverford College, Lafayette College, Lehigh University, Lock Haven State Teachers, Pennsylvania State College, Slippery Rock State Teachers, Swarthmore College, Temple University, University of Pennsylvania, West Chester State Teachers, Westminster College.
VIRGINIA—University of Virginia, Washington & Lee University.

Society for American Soccer History

NEW ENGLAND INTERCOLLEGIATE LEAGUE

	P	W	L	T	F	A	%
AMHERST COLLEGE	7	6	0	1	23	6	.928
SPRINGFIELD COLLEGE	5	4	0	1	28	4	.900
BROWN UNIVERSITY	5	4	0	1	10	4	.900
TRINITY COLLEGE	7	5	1	1	17	9	.785
UNIVERSITY OF CONNECTICUT	10	7	2	1	31	13	.667
WESLEYAN UNIVERSITY	7	2	3	2	12	13	.428
HARVARD UNIVERSITY	7	3	4	0	15	8	.428
YALE UNIVERSITY	6	2	3	1	7	6	.416
DARTMOUTH COLLEGE	5	2	3	0	7	11	.400
UNIV. OF MASSACHUSETTS	9	3	5	1	17	21	.388
MASSACHUSETTS INST. TECH.	7	2	4	1	14	26	.357
TUFTS COLLEGE	7	2	5	0	15	22	.285
WILLIAMS COLLEGE	5	1	4	0	4	13	.200
WORCESTER POLY. INST.	5	1	4	0	4	18	.200
CLARK UNIVERSITY	6	0	6	0	2	32	.000

Games played 49. Total goals 296. Average goals per game 4.204.

CHAMPIONS



BACK ROW L. TO R. — A. W. Marsh, Coach; R. R. Crump, N. K. Brown, G. R. Gay, W. K. Nichoson Jr., E. B. Hager, L. W. Abbott, R. K. Greene, G. Heller, E. Newport, trainer; S. M. Rostas, Asst. Coach; J. R. Hampson Jr., Manager; A. S. Lerner, Asst. Manager.
CENTER ROW L. TO R. — W. W. Anderson, H. J. Burnett, A. S. Deichmiller, L. D. Fernald Jr., E. Gardner, P. F. Coon, J. H. Beebe, T. H. Wyman, J. B. Martin, J. W. Fernandez Jr., J. F. Fairman Jr., H. M. Hamill Jr., W. A. Irvin Jr.
FRONT ROW L. TO R. — *F. B. Hollister Jr., J. K. Smith Jr., J. P. Butler, *T. D. Garrigan, *R. D. Knowlton, *D. F. Nesbitt Jr., Capt.; *C. W. Crowther, *P. F. Griffiths, *P. W. Spaulding, *D. C. Dunbar, *B. Nicholson.
Missing: *H. Eisner, *R. L. Lane. * 1950 Graduate.

Society for American Soccer History

RESULTS AND GOALSCORERS

AMHERST—M.I.T. 4-1; Harvard 2-0; Wesleyan 3-2; Tufts 7-1; Mass 1-1; Trinity 5-1; Williams 1-0; 23-6. SCORERS& H. J. Burnett 10, *J. K. Smith 4, H. Eisner 2, *P. F. Griffiths 2, *C. W. Crowther 2, *D. C. Dunbar, J. B. Martin, W. W. Anderson.

BROWN—Conn. 3-2; Harvard 1-0; M.I.T. 2-1; Yale 1-1; Dartmouth 3-0; 10-4. SCORERS. *Jas. Leach 3, David Michael 2, *Graham Michael 2, Allen Bartunek 2. Herb Wieboldt.

CLARK—Conn. 0-7; Mass. 0-3; Springfield 0-12; Tufts 1-5; Wesleyan 1-4; Worcester 0-1; 2-32; SCORERS. *Harold Graden 2.

CONN.—Dartmouth 5-1; Yale 2-1; Williams 5-0; Harvard 1-0; Mass. 4-1; Brown 2-3; Springfield 1-4; Clark 7-0; M.I.T. 3-3; Wesleyan 1-0; 31-13. SCORERS. *Cleveland 8, *Baldwin 4, *Fetterolf 4, Ohms 3, Aborn 2, Murphy 2, Thompson 2, *Kirschman, Higgins, Priddy, *Salling, *Tschnummi, *Ficken.

DARTMOUTH—Conn. 1-5; Harvard 3-0; Mass. 3-1; Yale 0-2; Brown 0-3; 7-11. SCORERS. Hopkins 3, *Clark, Fancher, Leshure, *Ringe.

HARVARD—Amherst 0-2; Conn. 0-1; Dartmouth 0-3; Tufts 4-1; Brown 0-1; M.I.T. 9-0; Yale 2-0 15-8. SCORERS. *Spivak 3, Drehmel 3, Goldstein, 2, Weiss 2, Johnson 2, Wolf 2, *Gilbert.

MASS.—Amherst 1-1; Conn. 1-4; Dartmouth 1-3; Williams 1-3; Clark 3-0; Worcester 5-1; Trinity 0-2; Springfield 1-6; Tufts 4-1; 17-21. SCORERS. *Winton 6, Kulas 3, Ferreira 2, *Jorge 2, Kroeck 2, Bucha, Fitzgerald.

M.I.T.—Amherst 1-4; Conn. 3-3 Harvard 0-9; Trinity 2-3; Tufts 4-3; Brown 1-2; Worcester 3-2; 14-26.

TRINITY—Amhrest 1-5; Mass. 2-0; M.I.T. 3-2; Worcester 6-0; Tufts 2-0; Yale 1-0; Wesleyan 2-2; 17-9. SCORERS. *Jim Brainerd 7, *G. Nelson 4, *J. Geiger 2, C. Nelson 2, N. Leo, F. Shaef.

WESLEYAN—Amherst 2-3; Conn. 0-1; Springfield 2-2; Trinity 2-2; Williams 2-1; Yale 0-3; Clark 4-1; 12-13. SCORERS. Taylor 7, Jones 2, *Powell 2, Barker.

WILLIAMS—Amherst 0-1; Conn. 0-5; Mass. 3-1; Springfield 0-4; Wesleyan 1-2; 4-13. SCORERS. Frank McManus 2, Dick Manning, George Miller.

YALE—Conn. 1-2; Harvard 0-2; Trinity 0-1; Brown 1-1; Dartmouth 2-0; Wesleyan 3-0; 7-6. SCORERS. Demetrio Fabrega 2, Donald Irwin 2, *Otto Guner; *Frank Dunne, *Jonathan Sloat.

SPRINGFIELD—Conn. 4-1; Mass. 6-1; Wesleyan 2-2; Williams 4-0; Clark 12-0; 28-4. SCORERS. *H. zenaty 8, *J. Hogan 3, T. Simos 3, R. Pizzaro 3, A. Pappas 2, G. Penndorf 2, J. Barbour 2, L. Hills 2, *T. Bradley 2, D. Spreen.

TUFTS—Amherst 1-7; Harvard 1-4; Mass. 1-4; M.I.T. 3-4; Trinity 0-2; Clark 5-1; Worcester 4-0; 15-22. SCORERS. *Morris 8, *Cratty 3, Bennett 3, CliZord.

WORCESTER—Mass. 1-5; M.I.T. 2-3; Trinity 0-6; Tufts 0-4; Clark 1-0; 4-18. SCORERS. *Thompson 2; *Meiklejohn, Beach.

*1950 Graduate.

THE SAMPSON TROPHY

This trophy is the perpetual emblem of New England Intercollegiate Soccer League championship. It is presented each year to the team with the

Society for American Soccer History

highest percentage of points on a basis of two for a win and one for a tie. Each team must play five to eight games to be eligible for the championship.

It was presented to the league by James M. Sampson, manager of soccer at Harvard University in 1934 when the league was founded and is of considerable value.

In eleven years of competition the trophy has been in the hands of seven out of the fifteen member colleges.

WINNERS

1934	Amherst	1938	Harvard	1942	Springfield - Amherst
1935	Yale	1939	Springfield		No award during war
1936	Brown	1940	Wesleyan	1947	Springfield
1937	Springfield	1941	Springfield	1948	Connecticut
				1949	Amherst

COACH	CAPTAINS	MANAGER
AMHERST—A. W. Marsh	H. M. Hamill	A. S. Lerner
BROWN—J. Kennaway	D. Michaels	R. Durwood
CLARK—R. Lambert	D. Straton—C. de Castro	R. Thurston
CONN.—J. Y. Squires	T. Coholan—M. Nichols	G. Braun
DARTMOUTH—T. Dent	D. O. Saxton	A. Wright
HARVARD—J. B. Munro	T. Wolf	E. Epstein
MASS.—L. E. Briggs	C. Libucha—T. Embler	N. Bellas
M.I.T.—R. Thomas	———	———
SPRINFF'D—I. R. Schmid	A. Pappas—T. Simos	R. Knowles
TRINITY—H. Shetter	R. Marshall—C. Nelson	R. Sanger
TUFTS—J. G. Bohn	G. Clifford—P. Carter	S. Russell
WESLEYAN—H. G. McCurdy	D. L. Taylor	J. F. Dodge
WILLIAMS—C. C. Chaffee	R. Dickinson	G. J. James
WORCESTER—E. Higginbottom	Fulmer	———
YALE—Jack Marshall	J. R. Lilley	P. S. Chapman

EASTERN (IVY) INTERCOLLEGIATE SOCCER LEAGUE

For the second year in a row, Cornell's soccer team is champion of the Eastern Intercollegiate League.

By its 4-3 victory over Pennsylvania in the final game of the year, the Big Red completed its season with four victories, one defeat and one tie, nosing out Princeton, leader for most of the season, which finished with five victories and two defeats. The two Tiger setbacks came in the last two games of the year while Cornell was winning two and tying one in its final spurt.

Even though they played one less game than several of the members of the league, whose champion is decided on a percentage basis since not all nine teams play the same number of games, the Cornellians scored more goals than any of their confreres. Princeton had the fewest goals scored against it.

By its victory, Cornell will be awarded the Nicky Bawlf Memorial Trophy, which was placed in competition by the Cornell Club of Ithaca in memory of Nicky Bawlf, who was coach at Ithaca for twenty-eight years.

Society for American Soccer History

REPEATERS



BACK ROW L TO R — R. Sodoma, J. Ogden, J. Orr, *J. Robinson, R. Ashton, T. Poutmy, L. Fahs, D. Worn, S. Campbell, J. Bal'ew, C. Spiller.
CENTER ROW L TO R — Coach Smith, C. Baglow, *R. Messersmith, J. Bowers, *R. Myers, *G. Gardiner, Co-Capt.; *J. Coffin, *F. Schwencke, Co-Capt.; R. Gebhardt, P. Rose, *R. Pfeifer, Manager.
FRONT ROW L TO R — *R. Stedge, H. Latimer, *J. McKinney, *A. Tappin, D. Derr, G. Meng, *R. Robinson, R. Little.
*** 1950 Graduate.**

	P	W	L	T	F	A	Pct.
CORNELL	6	4	1	1	14	9	.750
PRINCETON	7	5	2	0	9	3	.714
NAVY	6	4	2	0	10	7	.667
HARVARD	7	4	3	0	9	9	.571
BROWN	7	3	3	1	9	7	.500
PENNSYLVANIA	7	3	4	0	13	14	.429
YALE	8	2	4	2	6	12	.375
DARTMOUTH	5	1	3	1	5	8	.300
ARMY	5	0	4	1	4	10	.100

Total games played 29. Total goals scored 79. Average goals per game 2.72.

RESULTS AND GOALSCORERS

ARMY—Navy 0-1; Princeton 0-2; Penn 2-3; Harvard 1-3; Yale 1-1; 4-10. SCORERS. Max Casas, Ken Good, *Don Novak, *Geo. Vlisides.

BROWN—Navy 0-1; Cornell 1-3; Princeton 0-1; Penn 3-1; Harvard 1-0; Yale 1-1; Dartmouth 3-0; 9-7. SCORERS. *Jas. Leach 4, *Herb Wieboldt 2, David Michael, *Graham Michael, Allen Bartunek.

CORNELL—Harvard 3-1; Yale 1-0; Princeton 1-2; Brown 3-1; Dartmouth 2-2; Penn 4-3; 14-9. SCORERS. Gunter Meng 5, Derl Derr 4, *Jos. McKinney 2, Anthony Tappin, Leo Fahs, *Gordon Gardiner.

Society for American Soccer History

DARTMOUTH—Cornell 2-2; Penn 0-1; Harvard 3-0; Brown 0-3; Yale 0-2; 5-8. SCORERS. Clark 2, Hopkins 2, Leshure.

HARVARD—Navy 2-1; Cornell 1-3; Princeton 1-0; Army 3-1; Dartmouth 0-3; Brown 0-1; Yale 2-0; 9-9. SCORERS. Goldstein 3, Wolf 2, Johnson, Weiss, Harvey, Drehmel.

NAVY—Princeton 0-3; Yale 3-1; Army 1-0; Penn 4-1; Brown 1-0; Harvard 1-2; 10-7. SCORERS. Tom Boyce 6, *David Space 2, Norman Busse, Wm. Craven.

PENN—Navy 1-4; Cornell 3-4; Princeton 0-1; Brown 1-3; Yale 4-0; Army 3-2; Dartmouth 1-0; 13-14.SCORERS. *David Welsh 4, Phil Repetto 2, *Harry Barfoot 2, David Ffrench, *Sellers Kite, Warren Stone, Paul Marcuson, Yale own goal.

PRINCETON—Navy 3-0; Cornell 2-1; Penn 1-0; Brown 1-0; Army 2-0; Harvard 0-1; Yale 0-1; 9-3. SCORERS. Thos. Moore 3, *Jas Wallace 2, Herb Hedick 2, Serge Prado, *Franklin Pierce.

YALE—Navy 1-3; Cornell 0-1; Princeton 1-0; Penn 0-4; Harvard 0-2; Brown 1-1; Dartmouth 2-0; Army 1-1; 6-12. SCORERS. Donald Irwin 4, *Frank Dunne, *Otto Gruner.

* 1950 Graduate.

	COACH	CAPTAIN	MANAGER
ARMY—	Jos. Palone	Dan H. Wardrop	Wm. Richardson
BROWN—	Jos. Kennaway	David Michael	Richard Durwood
CORNELL—	Ross (Jim) Smith	Derl Derr	Dan Ehrhart
DARTMOUTH—	Tom Dent	David Saxton	Alan Wright
HARVARD—	Bruce Munro	Ted Wolf	Edward Epstein
NAVY—	Glenn Warner	Wm. Craven	Raymond Heltulla
PENN—	Chas Scott	Robt. Colquhoun	Roland McDonough
PRINCETON—	Jas. J. Reed	John Mott	John Moore
YALE—	Jack Marshall	Jas Lilley	Peter Chapman

MIDDLE ATLANTIC STATES CONFERENCE

By Robert H. Dunn, Swarthmore College, Chairman

The 1949 Middle Atlantic Conference, produced another thrilling wind-up when the winners of the respective leagues were not decided until the final games.

The post-season playoff between Swarthmore and Bucknell, titlists in their respective divisions, was won by the former but not until Bucknell, trailing 2-0, tied the score in the last seven minutes, only to lose in extra periods when Al Yasir, Swarthmore's spirited center forward, scored his third successive goal.

Swarthmore and Haverford, met in an Eastern Division final that resulted in a 1-0 Swarthmore victory. Had this game been tied it would have created a three-way tie for the title. Another final game in the Northern Division resulted in a Muhlenburg 1-0 victory over Stevens. A win for Stevens would have caused a first place tie.

The Southwest League final game between Bucknell and F. & M. resulted in an extra period 1-0 win for Bucknell. Bucknell, undefeated during the season in league play, won the title for the third successive season. Noteworthy scoring performances were registered by Sophomore Richard Gigon of Lehigh, when he booted five goals in each of the Delaware and Ursinus games and again counted with four against Delaware.

Society for American Soccer History

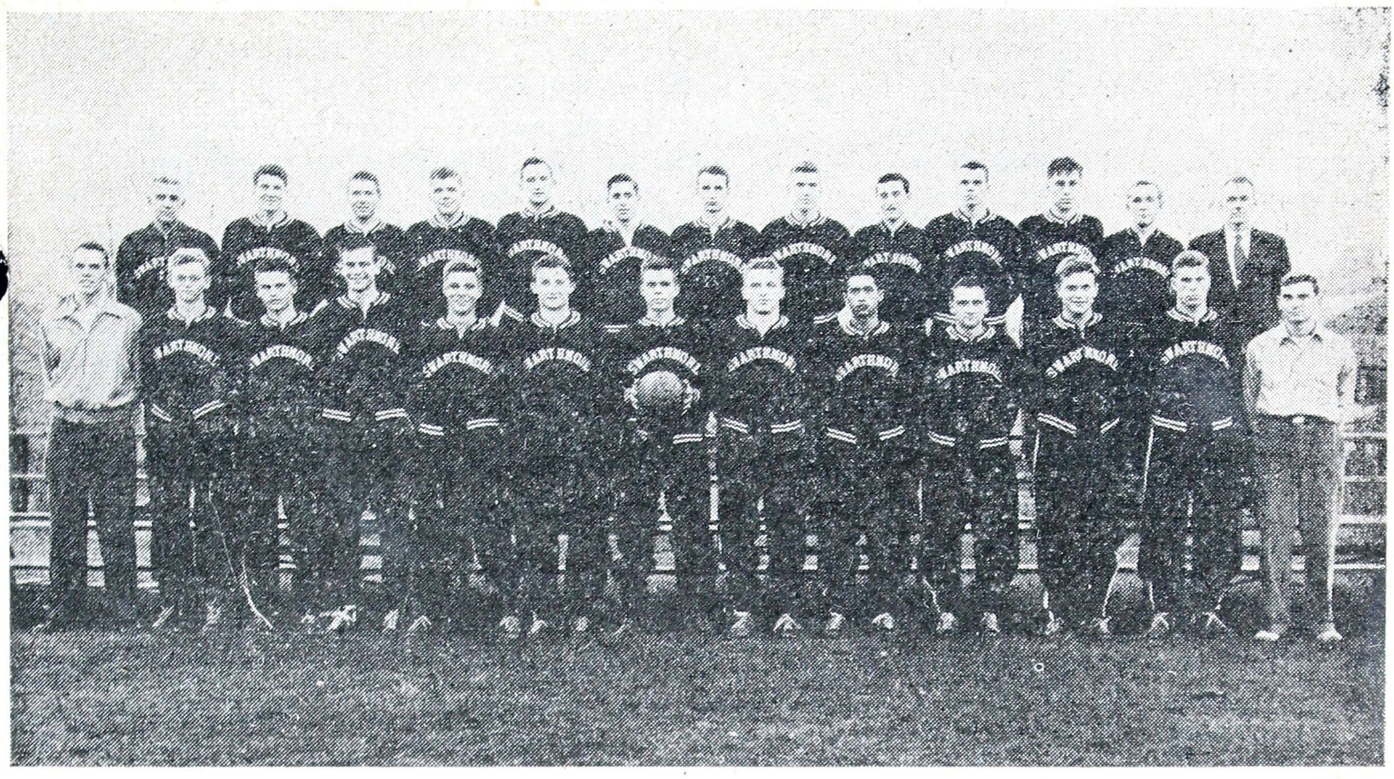

BACK ROW L to R — R. H. Dunn, Coach; L. Seaman, *A. Hunt, A. J. Lewis, S. Clark, *R. Gernert, *E. Brebner, *J. A. Lande, *R. Kyle, *D. Peele, *J. Carroll, Wood, Fac. Rep.
FRONT ROW L TO R — *N. McAvoy, R. Willmott, P. Shoup, *E. Mahler, *B. Shane, G. Place, *D. Doehlert, Capt.; K. Ruhl, A. AlYasir, W. Spock, F. Elliott, *J. Smucker, *C. Shafer.
*** 1950 Graduate.**

NORTHEAST LEAGUE

	P	W	L	T	F	A	Pct.
*SWARTHMORE COLLEGE	5	4	1	0	11	3	.800
RUTGERS UNIVERSITY	5	3	1	1	10	6	.700
HAVERFORD COLLEGE	5	3	2	0	20	6	.600
STEVENS TECH INST.	5	3	2	0	10	5	.600
LEHIGH UNIVERSITY	5	2	1	2	17	5	.600
MUHLENBERG COLLEGE	5	2	1	2	10	12	.600
LAFAYETTE COLLEGE	5	1	3	1	4	17	.300
URSINUS COLLEGE	5	0	5	0	0	21	.000

SOUTHWEST LEAGUE

	P	W	L	T	F	A	Pct.
BUCKNELL UNIVERSITY	5	5	0	0	13	4	1.000
F & M COLLEGE	5	4	1	0	13	5	.800
DREXEL TECH INST.	5	3	1	1	15	10	.700
WASHINGTON COLLEGE	5	2	1	2	7	6	.600
GETTYSBURG COLLEGE	5	1	3	1	7	9	.300
JOHNS HOPKINS UNIV.	5	1	4	0	9	13	.200
DELAWARE UNIVERSITY	5	1	4	0	4	10	.200
WEST MARYLAND COLLEGE	5	1	4	0	3	13	.200

* Winner playoff and Conference champion.

Society for American Soccer History

NORTHERN	W	L	T	EASTERN	W	L	T	SOUTHERN	W	L	T	WESTERN	W	L	T
Rutgers	2	0	1	Swarthm'e	3	0	0	Drexel	2	0	1	Bucknell	3	0	0
Muhlenberg	2	0	1	Lehigh	2	1	0	Washin'ton	2	0	1	F. & M.	2	1	0
Stevens	1	2	0	Haverford	1	2	0	J. Hopkins	1	2	0	W. Maryl'd	1	2	0
Lafayette	0	3	0	Ursinus	0	3	0	Delaware	0	3	0	Gettysburg	0	3	0

RESULTS AND GOALSCORERS

NORTHEAST LEAGUE

HAVERFORD—Alumni 5-1; Penn 3-2; Temple 1-4; Lafayette 6-1; Muhlenberg 8-1; Navy 1-2; Lehigh 3-5; Ursinus 3-0; Drexel 4-1; Swarthmore 0-1. SCORERS. E. A. Jones 11, P. E. Shipley 7, J. W. Woll 7, D. A. Ritchie 7, *A. Lucine 3, N. C. Chantiles 2, A. B. Clayton 2, A. P. Crolius 2,E. R. Snader, *R. L. Sutton.

LAFAYETTE—E. Stroudsburg 1-1; Temple 2-4; Haverford 1-6; Lehigh 1-1; F. & M. 0-2; Muhlenberg 2-5; Stevens 1-2; Ursinus 3-0; Rutgers 1-3; Seton Hall 1-1. SCORERS. *J. Woglom 5, *Harpster 2, J. Huribut 2, W. Oakes 2, J. Mamo, *J. Speece.

LEHIGH—Swarthmore 1-2; Rutgers 2-2; Haverford 5-3; Lafayette 1-1; Ursinus 8-0; F. & M. 2-0; Gettysburg 0-1; Delaware 7-1; Muhlenberg 2-2. SCORERS. R. Gigon 16, G. Gigon 5, L. Gabriel 4, A. Eastburn, K. Hankinson.

MUHLENBERG—Rutgers 1-1; Stevens 1-0; Haverford 1-8; Seton Hall 1-6; Gettysburg 1-2; Lafayette 5-2; Lehigh 2-2. SCORERS. No Records.

RUTGERS—Swarthmore 1-4; Muhlenberg 1-1; Lafayette 3-1; Ursinus 0-2; Sevens 3-2; Lehigh 1-1. SCORERS. No Records.

STEVENS—Alumni 4-4; Columbia 5-2; Ursinus 4-0; Swarthmore 1-0; Rutgers 2-3; Wesleyan 3-2; Pratt 5-2; Lafayette 2-1; Muhlenberg 0-1; Delaware 1-1. SCORERS. *J. Dutton 3, R. Stiefbold 2, G. Ferrante 2, W. Downey, G. Leibiger.

SWARTHMORE—Princeton 2-1; Penn 1-2; Rutgers 4-1; Stevens 0-1; Ursinus 4-0; Lehigh 2-1; Navy 0-2; Haverford 1-0; Bucknell 3-2. SCORERS Alyasir 8, Spock 4, *Shane 3, Willmott, Place.

URSINUS—Swarthmore 0-4; Stevens 0-4; Lehigh 0-8; Haverford 0-3; Rutgers 0-2; Lafayette 0-3; Alumni 3-2; Lincoln 2-6; F. & M. 1-2.

* 1950 Graduate.

SOUTHWEST LEAGUE

BUCKNELL—Delaware 3-1; Drexel 4-2; Gettysburg 2-0; W. Maryland 3-1; F. & M. 1-0. SCORERS. *A. Raynor 5, *M. Machamer 4, *R. Remer 3, *D. Strassner.

DELAWARE—Bucknell 1-3; W. Maryland 1-0; F. & M. 0-4; Drexel 0-3; Johns Hopkins 2-3. SCORERS. Haight West 2, *Dick Murray 2, James Cann 2, Ernie Chamorro, Jack Torkelson, *Ken Walls, *Jules Hoffstein.

DREXEL—Bucknell 2-4; Delaware 3-0; W. Maryland 4-1; Johns Hopkins 4-2; Washington 2-2. SCORERS. Robt. Linde 8, *Shakap Daga 3, *Norm Smith 2, Bob Jones, Ed Stier.

F. & M.—Bucknell 0-1; Delaware 4-0; Gettysburg 3-2; John Hopkins 5-1; Washington 2-1. SCORERS. R. Klinger 10, *D. Klinger 6, Bentler 4, *Hoover 3, Wagner 3, Chambers 2, *Murray 1.

Society for American Soccer History

GETTYSBURG—Bucknell 0-2; Johns Hopkins 4-2; Washington 1-1; F. & M. 2-3; W. Maryland 0-1. SCORERS. Ortel 2, Schmitt 2, Aspen, Hamman, *Shively.

JOHNS HOPKINS—Delaware 3-2; Gettysburg 2-4; Drexel 2-4; F. & M. 1-5; Washington 1-2. SCORERS. No records.

WASHINGTON—Gettysburg 1-1; Drexel 2-2; Johns Hopkins 2-1; W. Maryland 4-0; F. & M. 1-2. SCORERS. Brower 5, *Bachetta, Hartje, Wood, *Tilley, Larrimore.

W. MARYLAND—Bucknell 1-3; Delaware 0-1; Gettysburg 1-0; Drexel 1-4; Washington 0-4. SCORERS. *Winfrey 3, Kettells 2, *Sandler, Bartgis, Culhane.

* 1950 Graduate.

	COACH	CAPTAINS	MANAGERS
BUCKNELL	Joe Diblin	R. Roush—R. Diedolf	T. Simpson
DELAWARE	A. H. Burnham	Haight West	G. D. Stewart
DREXEL	Don Yonker	E. Stier—R. Line	J. Nolte
F. & M.	R. A. Smith	F. Wagner — R. Bentler	.....
GETTYSBURG	W Hartshorne	.....	H. B. Graeff
HAVERFORD	Jim Mills	V. T. A. Jowers—P. E. Shipley	D. W. Sears
JOHN HOPKINS	.....	J. Smith	J. Aquavella
LAFAYETTE	Jack Trotter	W. Seaman — W. Oakes	W. Hunt
LEHIGH	W. Sheridan	Harris R. Gates	D. Savage
MUHLENBERG	C. Altemose	C. Campbell — P. Shegina	F. Hanneman
RUTGERS	G. W. Dochat	.....	J. Mayer
STEVENS	J. B. Singer	Wm. Downey	A. G. Dourgarian
SWARTHMORE	Bob Dunn	Ali Alyasir	C. Shafer
URSINUS	D. Baker	J. R. Powell	R. W. Heinel
WASHINGTON	E. L. Athley	Frank Brower	Duke Case
W. MARYLAND	P. E. Uhrig	.....	R. Winfrey

MASON-DIXON CONFERENCE

	P	W	L	T	F	A	Pct.
*BALTIMORE UNIVERSITY	6	6	0	0	17	1	1.000
TOWSON COLLEGE	7	6	1	0	13	2	.857
LOYOLA COLLEGE	6	4	2	0	13	4	.666
WASHINGTON COLLEGE	6	3	2	1	1	5	.583
W. MARYLAND COLLEGE	6	2	4	0	12	16	.333
ROANOKE COLLEGE	2	0	2	0	0	8	.000
JOHNS HOPKINS UNIV.	4	0	4	0	4	12	.000
AMERICAN UNIVERSITY	5	0	5	0	1	21	.000

*Awarded 1-1 game against Washington for latter's use of ineligible player.

RESULTS AND GOAL SCORERS

AMERICAN UNIV.—Baltimore 0-5; Loyola 0-5; Towson 0-4; W. Maryland 0-4. Washington 1-3; Pan American Union 0-5; SCORERS. Stanley Brannick.

Society for American Soccer History

BALTIMORE UNIV.—Roanoke 5-0; American U 5-0; Towson 1-0; W. Maryland 4-1; Washington 1-0; Loyola 1-0. SCORERS. Rostek 9, Beck 3, Tomassi 2, Murray, Dashner, Peterka.

JOHNS HOPKINS UNIV.—Washington 1-2; Towson 0-2; Loyola 1-3; W. Maryland 2-5; SCORERS. No record.

LOYOLA COLL.—Baltimore 0-1; Johns Hopkins 3-1; American Un. 5-0; Towson 0-1; Washington 1-0; W. Maryland 4-1. SCORERS. No records.

ROANOKE COLL.—Baltimore 0-5; Towson 0-3; Richmond P.I. 6-0; 3-[illegible] Washington & Lee 2-4, 3-1; Virginia 1-0; SCORERS. *Walter Transpose 8, John Raleigh 3, Wallace Lord 2, Chas. Mulchahey, Fred Pearl.

TOWNSON COLL.—Baltimore 0-1; Johns Hopkins 2-0; Loyola 1-0; American U 4-0; Washington 1-0; Roanoke 3-0; W. Maryland 2-1; Frostburg 1-1; Salisbury 2-2; SCORERS. Reese 5, Bryant 4, Gernand 3, DeFries, Scott, Hattes, Dize.

WASHINGTON COLL.—Baltimore 0-1; John Hopkins 2-1; Loyola 0-1; Towson 0-1; W. Maryland 4-0; American U. 3-1; SCORERS. Brower 3. Hartje, Wood, Horne, Larrimore, *Tilley. Forfeiter 1-1 game against Baltimore, ineligible player.

WEST MARYLAND—Baltimore 1-4; Johns Hopkins 5-2; Loyola 1-4; Towson 1-2; American U. 4-0; Washington 0-4. SCORERS. *Winfrey 3, Kentells 2, *Sandler, Bartgis, Culhane.

WINNERS

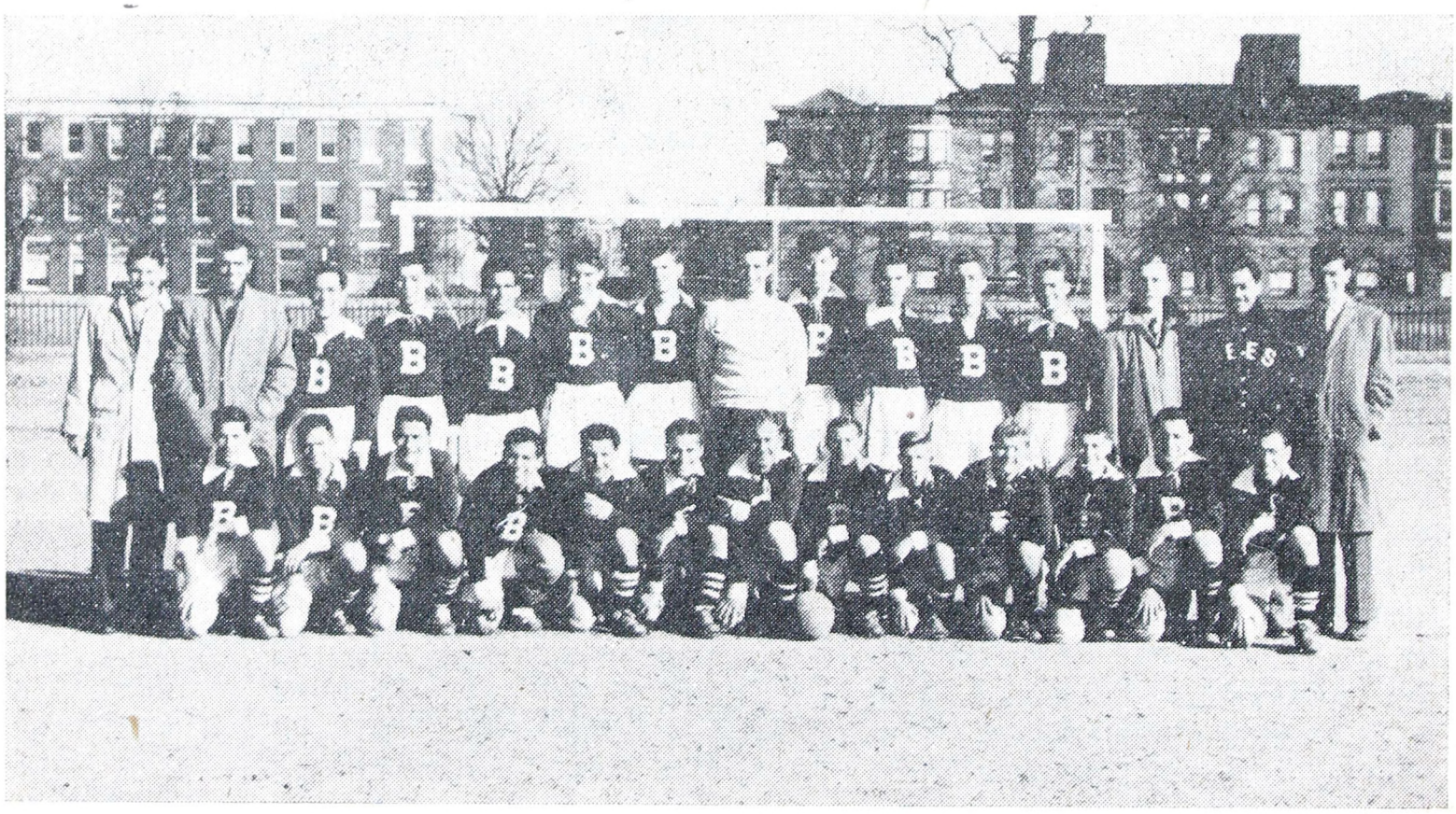

STANDING — Bill Felmar, Asst. Coach; Calvin Ermer, Coach; Gene Schuyler, Richard Murray, Pete Tomassi, Herb Weidel, Vern Mummert, Don Buttermore, Bob Griffith, Stan Rostek, Bill Beck, Ed Plitt, Earl Gerding, Manager; Gene Hummel, Trainer; Harry Weeks, Manager.
KNEELING — Walt Nawrocki, Richard Newman, Don Brodsky, Gabe Maggitti, Frank Bellusci, Ronnie Dasher, Russel Deppish, Capt.; Mike D'Ambrosio, Ken Miller, Jim Janiski, Jim Peterka, Bill Geho, Jim Petrosillo.

Society for American Soccer History

	COACH	CAPTAINS	MANAGER
AMERICAN U.	G. Roberts	Don Acquilino	Larry Volin
BALTIMORE U.	.....	R. Deppish	E. Gerding—H Weeks
JOHNS HOPKINS	.....	Jas Smith	Jas Aquabella
ROANOKE	E. D. Fox	R. Bentley—W Lord	Michael Fatiuk
TOWSON	.....	John Lowe	Elmer Dize
WASHINGTON	E. L. Athey	Frank Brower	Dave Case
W. MARYLAND	P. E. Uhrig	.....	Robt. Winfrey

NORTHERN CALIFORNIA CONFERENCE

	P	W	L	T	P
UNIVERSITY OF SAN FRANCISCO	6	6	0	0	12
UNIVERSITY OF CALIFORNIA	6	5	1	0	10
SAN FRANCISCO STATE	6	3	2	1	7
SAN FRANCISCO C.C.	6	3	2	1	7
SANTA CLARA UNIVERSITY	6	2	4	0	4
STANFORD UNIVERSITY	6	0	5	1	1
CALIFORNIA AGGIES	6	0	5	1	1

RESULTS AND GOAL SCORERS

UNIV. OF S.F.—Santa Clara 6-3; California 4-1; S.F.C.C. 5-2; California Aggies 9-1; Stanford 4-0; U.C.L.A. 3-1; Conference All-Stars 4-0.
SCORERS: Dick Paptista 17, Joe Matute 7, Mario Ugarte 5, Henry Kirner 4, Luis Ugarte, Steve Negoesco, Bob Lee, Bob Lommori.

SANTA CLARA—U. of of S.F. 3-6; California Aggies 4-1; S.F. State 2-4; Stanford 3-0; California 2-6; S.F.C.C. 1-4.
SCORERS: Paul Leitao, Vasco Leitao, Ricardo Godoy, *Miguel Xavier. Pedro Lobo.

	COACH	CAPTAINS	MANAGERS
UNIV. OF S.F. ..	A. Donoghue		Joe Gumina
SANTA CLARA..	—	Fritz R. Gemperle	Pierre McBeth

SOUTHERN CONFERENCE

	P	W	L	T	F	A	%
MARYLAND UNIVERSITY	3	3	0	0	8	4	1.000
NORTH CAROLINA UNIVERSITY	6	5	1	0	16	4	.833
NORTH CAROLINA STATE	5	2	3	0	4	12	.400
DUKE UNIVERSITY	6	2	4	0	7	10	.333
WASHINGTON & LEE	4	0	4	0	2	10	.000

RESULTS AND GOAL SCORERS

DUKE—Maryland 1-4; Washington & Lee 2-1; N.C. State 1-2, 2-0; N.C. Univ. 0-1, 1-2. SCORERS. No records.

MARYLAND UNIVERSITY—Washington & Lee 3-0; Duke 4-1; N.C. Univ. 1-0. SCORERS: Belt 3, Savage 3, Volpe, *Hamilton.

N.C. STATE—Washington & Lee 1-0; Duke 2-1, 0-2; N.C. Univ. 1-3, 0-6; SCORERS. No records.

Society for American Soccer History

N.C. UNIVERSITY—Maryland 0-1; N.C. Univ. 4-1; N.C. State 3-1, 6-0; Duke 1-0, 2-1. SCORERS. No records.

WASHINGTON & LEE—N.C. Univ. 1-4; Maryland 0-3; N.C. State 0-1! Duke 1-2, SCODERS: *Cryoder.
*1950 Graduate.

	COACH	CAPTAINS	MANAGERS
MARYLAND UNIVERSITY	Doyle Royal	James Belt	.....
N.C. UNIV.	Marvin Allen	Buck Blankenship	MacWhite
WASHINGTON & LEE	N. F. Lord	James T. Trundle	P. Nelson-J. Mohr

METROPOLITAN (N. Y.) INTERCOLLEGIATE LEAGUE
1949 STANDINGS

BROOKLYN COLLEGE	3	3	0	0	30	4	1.000
CITY COLLEGE N. Y.	3	1	1	1	12	21	.500
QUEENS COLLEGE	3	1	1	1	14	24	.500
PRATT	3	0	3	0	14	24	.500

SCORES AND GOALSCORERS

BROOKLYN—Kings Point 4-2; Pratt 6-0; Queens 7-0; Columbia 4-0; L. I. Aggies 5-2; City College 4-0; 6-0-0. SCORERS. Clem Grillo 17, George Banet 4, Paul Rouin 4, Wm. Moody, *Jack Russman.

CITY COLLEGE—Seton Hall 0-4; Panzer 1-2; Alumnj 3-2; Trenton 2-5; Queens 2-2; Brooklyn 0-4; Pratt 4-2; 2-1-4. SCORERS. *Werner Rothschild 6, *Rocco Amoroso 3, Wm. Galan 2, Henry Ries 2, Mauricio Wertman, *Marvin Schuman.

PRATT—Queens 1-2; Brooklyn 0-6; Columbia 3-2; Kings Point 2-3; Stevens 1-5; Ft. Schuyler 3-0; L. I. Aggies 1-0; City College 2-4; Queens 1-2; 3-6-0. SCORERS. *Unflat 3, *Sleight 3, Cohen 2, Dibble, *Trevino, Donaudy, Artinano, Schneider, Treitel.

QUEENS—Pratt 2-1; L. I. Aggies 0-0; Brooklyn 0-7; City College 2-2; Columbia 3-0; 3-1; Kings Point 0-1; Pratt 2-1; Howard Un. 2-11; 4-3-2. SCORERS. *Tsalikis 5, *Adler 2, Strauss, Spatz, Elsberry, Roer, Hazell, Locastro, Schrenzel.
* 1950 Graduate.

MIDWESTERN COLLEGIATE CONFERENCE

This new league, under the presidency of Prof. Y. S. Touloukian of Purdue University and with Vito Reggio as secretary-treasurer will open a ten-game schedule in the Fall. Charter members are, Chicago, Indiana and Purdue Universities, Wheaton College and Morton Junior College.

NON LEAGUE UNIVERSITIES AND COLLEGES
CALIFORNIA

UCLA—Winner, S. California Met League and Pacific Coast Conference. Macabee 5-2, 3-1; Victorja 3-1, 6-3; Calif Tech 16-3; Moctezoma 9-0, 2-1; University of California 4-3; Stanford 5-1; S. F. State 5-2; Univ. of S. Calif. 3-2; Univ. of S. F. 1-3; Hakoah 6-2, 12-1-0. SCORERS.

Society for American Soccer History

*Bignone 18, *Sitling 16, Behhl 15, Powell 4, O'Grady 4, Greyocian 4, *Huttenback 2, *Partin 2, *Nielson 2, *Meynun.
Ed. Stewart, coach; Bob Huttenback, captain; Roy Jones, student manager.

INDIANA

PURDUE—Morton 3-0, 3-0; Wheaton 2-4; Illinois Univ. 8-0; Chicago Univ. 4-2; Indiana Univ. 6-0. SCORERS. E. Freitas, L. Siero, *C. De Martini, E. Abascal, *M. Carrero.
Y. S. Houloukian, coach; Louis Siero, Amin Ary, Frank Hyneman, captains.

MARYLAND

FROTSBURG STATE TEACHERS—Towson 1-1; Lock Haven 0-3; Slippery Rock 1-0; Carnegie Tech 0-1; Penn State JV 1-1; Westminster 2-1; Maryland U. Fros 5-2; Salisbury 2-2; Univ. of Virginia 0-1. SCORERS. Raymond Wenner 2, Harry Cain 2, David Lewis 2, *Roy Pepper 2, Allan Williams, Wm. Kroll, Ray Ralston, Sam Lisanti.
Kenneth Babcock, coach; Joseph McDaniels, student manager.

MASSACHUSETTS

FITCHBURG—Worcester Tech. 1-2; Clark 2-1; M.I.T. 4-2; Keene 2-0, 3-0; Boston Univ. 2-1; Suffolk 6-0, Bridgewater 4-1. 8-1-0. SCORERS: No records.

NICHOLS COLLEGE—Springfield JV 1-6; Conn. Fr. 0-2; Univ. Mass. Fr. 0-1; Brown Univ. 4-1; Harvard Fr. 2-2; M.I.T. 3-0; Alumni 4-2; Dartmouth Fr. 2-1. 4-3-1. SCORERS. *Whipple Crossman, *Norman Schmidt, *Albert Clifford, *Robert Collingwood, Kenneth Rondeau, Everett Sauermann, Ralph Bates, Charles Grimm.
Richard Bowler, coach; Whipple Crossman, captain, Jose Guerra, manager.

SUFFOLK UNIVERSITY—Tufts 0-10; New Bedford 0-7; New England Coll. 0-0; Bridgewater 0-3; Fitchburg 0-2; Bradford 0-0; Clark 0-7; M.I.T. JV 1-2. SCORERS. Myron Karess.
Malcolm Donahue, coach; John Szemkowicz, captain; Frank O'Neil, manager.

NEW JERSEY

PANZER—Trenton 1-2, 4-1; CCNY 2-1; Brockport 0-2; Army 0-3; N. Y. Aggies 3-2; E. Stroudsburg 1-2; Bridgeport 3-0; Kings Point 2-2; Westchester 3-3; Columbia 3-0. 5-4-2. SCORERS. *Fred Ingold 5, Frank Matullo 5, Rudy Gerhard 4, *Bob O'Connor 3, *Pete Conde 2, *Ernest Gnehm 2, Bob Nicholas. Louis Perogollo, coach.

NEW YORK

BROCKPORT—Genesco 11-0; Rochester Amat. Stars 3-1; Buffalo 4-2; Hamilton 2-0; Panzer 2-0; Seton Hall 0-1; Oswego 2-0; Cortland 2-0; W. Ontario 4-0; 8-1-0. SCORERS. *Whatford 7, Johnson 6, Sisson 6, *Marone 5, *Dodge 2, Kolacki 2, Thompson, *Stirling.

BUFFALO—Genesco 4-2; Brockport 2-4; Ontario Aggies 1-1; Oswego 3-1; Rochester 0-1; Edinboro 6-1; Wheaton 0-1; Toronto 1-3; McMaster 7-2;

Society for American Soccer History

4-4-2. SCORERS. Ed Abrams 6, Fred Rogers 5, *Norm. Weidner 4, *Fritz Reinhardt 4, Wm. Cunningham 2, Jim Strickland, John Bycina, John Sciortino.

CHAMPLAIN—Oswego 2-4; Siena 2-0; Dawson 2-1; West Point JV 1-1; McGill Univ. 4-1; Dartmouth Fr. 1-2; Union 1-6; Utica 2-2. 3-3-2. SCORERS. Lubell 4, Knickerbocker 4, Kohn 2, Duckworth 2, Gerlach, Goldschlag, Bolourchi.

COLGATE—R.P.I. 4-3; Rochester 1-0; Dartmouth 0-2; Syracuse 4-1; Penn State 2-5; Hamilton 1-0; Cornell 1-3; 4-3-0. SCORERS. Bergman 4, *Jaxcox 2, Vaughn 2, *Garette 2, *Darling.

COLUMBIA—Stevens 2-5; Queens 1-3, 0-3; City College 1-4; Panzer 0-3; Pratt 2-3; Brooklyn 0-4; Ft. Monmouth 0-4; 0-8-0. SCORERS. *Herschend 4, *Loeb, *Brown.

CORTLAND—Army 1-0; Springfield 2-1; Siena 4-0; Ithaca 1-1; R.P.I. 2-1; Syracuse 4-0; Rochester 3-0; Brockport 0-2. 6-1-1. SCORERS. *Flint 7.5; Ellithorpe 3, *Weir 2, Ray Tryon, Ralph Tryon, Nichols, DeMuth, VanKleeck .5.

GENESCO—Brockport 0-11; Buffalo 0-4; Utica 2-3; Ithaca 0-4; Rochester Fr. 3-0; Oswego 0-2; Roberts Wesleyan 5-1; Rochester Fr. 2-3; 2-6-0. SCORERS. Gene Mooney 8, *Savino. *Pisaro. Scarmoutsos, *Baker.

HAMILTON—Rochester 3-1; Oswego 1-1; Brockport 0-2; Union 1-0; Ithaca 1-1; Colgate 0-1; 2-2-2. SCORERS. A. Vollmer 2, C. Frisbie, W. Meservey, *W. Bloomer, *W. Haggerty.

ITHACA—Oswego 2-0; Rochester 3-0; Genesco 4-0; Cortland 1-1; Wilkes 8-0; Hamilton 1-1; Syracuse 4-1; Lock Haven 2-7; E. Stroudsburg 6-2; 6--1-2. SCORERS. *Westall 13, Halfin 5, *Gaffney 5, *Miller 4, Perkins, DeSimono, *Sheridan, *Bienlieu.

KINGS POINT ACADEMY—L. I. Aggies 4-2; Brooklyn 4-2; Seton Hall 0-5; Pratt 3-2; Panzer 2-2; E. Stroudsburg 1-9; Queens 1-0; 3-3-1. SCORERS. *Arnt Arntzen 5, *Malcolm Smith 3, *Roman Ostrowski 3, Jose Ortega, Sheldon Fidelman.

L. I. AGGIES—Kings Point 2-4; Queens 0-0; Panzer 2-3; Maritime Acd. 5-0; Brooklyn 2-5; Pratt 0-1; 1-4-1. SCORERS. Richard Andre, *Sergio Garcia, *James Maney, Albero Moller, *Seymour Rotter, Ed. Downs.

OSWEGO—Champlain 4-2; Ithaca 0-2; Hamilton 1-1; Utica 2-0; Buffalo 1-3; Genesco 2-0; Brockport 0-2; 3-3-1. SCORERS. H. Arnold 3, R. Pascuzzo 2, *C. Harrington 2, H. Sherman, *S. Leoniuk, *N. Ciufo.

R.P.I.—Colgate 3-4; Sesleyan 4-1; Union 3-1; Cortland 1-2; M.I.T. 7-1; Havana 2-4; Sprnigfield 1-5; 3-4-0. SCORERS. G. Gomez 11, *D. Secrest 4, M. Dias 2, O. Durnhofer, *A. Koefoed, V. Thisted, J. Walsh.

ROCHESTER—Hamilton 1-3; Colgate 0-1; Ithaca 0-3; Buffalo 1-0; Allegheny 4-1; Cortland 0-3; Union 1-2; Syracuse 0-3; 2-6-0. SCORERS Allen 2, Schaefer 2, Fowler, Druchenmiller, Williams.

SIENA—Williams 0-4; Champlain 0-2; Cortland 0-4; Rtica 1-1; R.P.I. Jr. 4-0; R.P.I. Jr. 2-0; Bridgeport 2-0; Seton Hall 0-2; Albany Business 4-0; Albany State 4-1; 5-4-1. SCORERS. *Maio 5, *Swan 4, *Pratt 3, *Squadere 2, *McKay 2, Pignone.

Society for American Soccer History

SYRACUSE—Union 6-1; Penn State 1-6; Colgate 1-4; Cortland 0-4; Ithaca 1-4; Army 4-0; Rochester 3-0; Cornell 0-3; 3-5-0. SCORERS. No record.

UNION—U. Mass. 2-5; Syracuse 1-6; R.P.I. 1-3; Hamilton 0-1; Williams 2-1; Champlain 6-1; Rochester 2-1; 3-4-0. SCORERS. No record.

UTICA—Genesco 3-2; Oswego 0-2; Siena 1-1; R.P.I. Fr. 0-4; Cortland Fr. 0-5; Champlain 2-2; 1-3-2. SCORERS. Bud Kane, *Jos. Romanow, Morris Artessa, Anthony Misukonis.

*1950 Graduate.

COACH	CAPTAINS	MANAGER
BROCKPORT—H. Parker	Ted Bondi-D. Thompson	David Day
BUFFALO—J. Adessa	E. Abrams	H. G. Barkhuff
CHAMPLAIN—V. A. Hartman	G. Garrant	I. Sonsky
		E. Sackman
COLGATE—J. Dalgety	Bid Bergman	J. Johnson
COLUMBIA— ———	———	J. Baer
CORTLAND—F. Halloway	J. Van Kleech	F. Freutzer
GENESCO—M. K. Thau	Elected each game	E. O'Brien
HAMILTON—J. F. Panatier	J. Barton	D. Ver Nooy
ITHACA—I. Yavits	———	W. Dubenovich
KINGS POINT—J. Cox (Lt. jg)	E. F. Lawson	R. M. Blair
L. I. AGGIES—E. Richardson	A. Dickerson	H. Oliver
OSWEGO—R. H. Luce	J. Jones-J. DeSantis	J. Byrne
R.P.I.—Wm. Gailey	L. Monnoleto	H. Gregory
ROCHESTER—W. Campbell	J. DeMocher	W. Peckham
SIENA—H. M. Smith	A. Pignone	J. Urtis
SYRACUSE—A. Horrocks	———	———
UNION—J. H. Wittner	E. Smith	K. Schneelock
UTICA—D. Cunningham	F. Knittle	M. Ben

OHIO

KENYON COLLEGE—Oberlin 0-6; Allegheny 5-3; Kent State 1-3; Thiel 2-2; Wheaton 3-2; Western Reserve 4-1. 1-4-1. SCORERS. Day 6, *Schroeder 4, *Hoedt 2, *Martin, Ellsworth.

OBERLIN COLLEGE—Western Reserve 5-1, 9-1; Kenyon 6-0; Kent State 7-2; Wheaton 2-2; Chicago 2-1; Carnegie Tech 2-0; Slippery Rock 4-2; Allegheny 6-2; 8-0-1. SCORERS. *Howie Curtis 9, John Atwater 6, Pete Bellows 6, *Wes Simon 5, *George Wiley 5, Richard Dudley 4, Robert Snyder 2, Bob McKay 2, John Teltsch 2, Bill Emery, Bob Shults. Benjamin S. Collins, coach; Richard Dudley, captain; Eugene Piette, manager.

*1950 Graduate.

PENNSYLVANIA

ALLEGHENY—Edinboro, 3-1; Kenyon 3-5; Thiel 3-6; Grove City 1-0; Slippery Rock 0-2; Westminster 1-3; Rochester 1-4; Carnegie Tech 2-3; Oberlin 2-6; 2-7-0. SCORERS. *Christopherson 7, *Huff 2, Lewis 2, Welsh 2, Tillotson 2, Blomquist.

BLOOMSBURG—Wilkies Coll 3-2; Lincoln 2-0; Elizabethtown 2-1; Lock Haven 1-2; Westchester 0-4; Howard 0-3 Indiana 0-0; Wilkies 3-1; 4-3-1. SCORERS. **No records.**

Society for American Soccer History

CARNEGIE TECH—Frostburg 1-0; Slippery Rock 1-2; Oberlin 0-2; Thiel 3-2; Westminster 0-1; Allegheny 3-2; Indiana 1-3; Grove City 2-1; 4-4-0. SCORERS. **F. R. Jenkins 4, J. E. Vaux 2, J. C. Burrey 2,** H. Kanee, R. H. Lipp, F. J. Lara.

E. STROUDSBURG—Lafayette 1-1; Westchester 1-2; Trenton 2-2; Lock Haven 1-4; Panzer 2-1; Wilkies 9-3; Ithaca 2-6; Kings Point 9-1; 3-3-2. SCORERS. *Sam Lunier 7, Robt. French 7, *Robt. Millard 4, *Ja[illegible] Schmeitzen 3, Theo. Hess 3, Donald Daniels, Mark Nejako, Jac[illegible] Demick.

EDINBORO—Westminster 0-2; Grove City 1-2; 2-0; Allegheny 1-3; Thiel 2-4; Slippery Rock 0-4; Indiana 2-3; Buffalo Tech 0-6; 1-7-0. SCORERS. Zeiler 5, *Daugherty, *Greenwalt, *Krzan.

ELIZABETHTOWN—No records.

GROVE CITY—Edinboro 2-1; 0-2; Westminster 1-1; 1-0; Allegheny 0-1; Thiel 1-2; Wheaton 2-0; Carnegie Tech 1-2; 3-4-1. SCORERS. Alex Eggers 4, *Jim Davis 3, Glenn Fountain.

INDIANA—Kiski 6-0; 7-0; Edinboro 3-0; Carnegie Tech 3-1; Slippery Rock 1-3; Lock Haven 1-3; Thiel 1-2; 4-3-0. SCORERS. Mike Lenowski 10, Harry Prandini 5, Paul Perhosky 5, David Rosenberg 2.

LINCOLN—No records.

LOCK HAVEN—Frostburg 3-0; Bloomsburg 2-1; E. Stroudsburg 4-1; Harvard 2-4; Indiana 5-1; Ithaca 7-2; Elizabethtown 4-2; Bucknell 3-1; 7-1-0. SCORERS. Ross Hughes 8, *Joe Ticcony 7, Dio Chamberlin 5, *Bill Gingerich 4, Chas Reich 2, Barney Vogt 2, *Geo. Ticonny, Harry Muckle.

PENN STATE—Westchester 6-0; Bucknell 5-0; Syracuse 6-1; Navy 3-0; Colgate 5-2; N. Carolina 3-2; Maryland 3-2; Temple 2-1; 8-0-0. SCORERS. Joe Lane 11, Harry Little 7, *Ted Lieb 5, Clare Buss 3, *Harry Lawroski 3, *Ralph Hosterman 2, *Spence Boyer, Ronald Coleman.

SLIPPERY ROCK—Indiana 3-1; Frostburg 0-1; Edinboro 4-0; Carnegie Tech 2-1; Westminster 3-0; Allegheny 2-0; Oberlin 2-4; 5-2-0. SCORERS. John Buckey 6, Roy Bruno 4, Paul Guza 2, Glenn Smith, Harry Spataro, Ken. Strimmel, *Wade White.

TEMPLE—Bucknell 4-0; Lafayette 4-2; Haverford 4-1; Muhlenberg 2-1; Rutgers 3-1; Delaware 3-0; Maryland 1-0; LaSalle 4-1; Drexel 2-0; Penn State 1-2; 9-1-0. SCORERS. *Fred Barlow 11, Rudy Petti 8, Robt. Gault 5, *John MacKenzie 2, John Havirisk 2.

THIEL—Edinboro 4-2; Allegheny 6-3; Westminster 0-3; Kenyon 2-2; Carnegie Tech 2-3; Grove City 2-1; Indiana 2-1; 4-2-1. SCORERS. Irvin Chambers 5, Roy Guinn 5, Jack McNerny 4, Oliver Falck 2, James Percy, Robert Horsch.

WEST CHESTER—Penn State 0-6; Johns Hopkins 4-1; E. Stroudsburg 2-1; LaSalle 6-0; Bloomsburg 4-0; Seton Hall 2-1; Penn 1-0; Panzer 3-3; Delaware 1-0; Baltimore 0-1; 7-2-1. SCORERS: R. Dath 8, L. Dollarton 6, *R. Link 4, *J. Marsden 2, *E. James 2, R. Hoffman.

WESTMINSTER—Edinboro 2-0; Grove City 1-1, 1-1; Thiel 3-0; Slippery Rock 0-3; Frostburg 1-2; Allegheny 3-1; Carnegie Tech. 1-0; 4-2-2-. SCORERS. Alex Spisak, Thos Wilson, Edwin Urban, Paul Fenwick, Emil Resnick.

* 1950 Graduate.

Society for American Soccer History

	COACH	CAPTAINS	MANAGERS
ALLEGHENY	W. C. Hanson	—	Lee Breakwell
CARNEGIE	P. F. O'Connor	John Burrey	Jack Horst
E. STROUDSBURG.	H. R. DeNike	J. Demick—R. Millard	Jos. Valzone
EDINBORO	B. R. Harrison	B. Zeiler	—
GROVE CITY	R. E. Thorn	Named in each game	—
INDIANA	B. Bernabei	P. Colpo — H. Prandini	—
LOCK HAVEN	S. C. Wooley	—	—
PENN STATE	Bill Jeffrey	Harry Little	Neil See
SLIPPERY ROCK..	J. R. Eiler	R. Bruno—W. Meyes	Herbert Mazerov
TEMPLE	W. P. Leanness	R. Gault—W. Kalkbrenner	Paul Sacks
THIEL	G. Lumsden	Jack McNerny	Robt Tramsen
WESTCHESTER ..	E. C. Waters	L. Dollarton—R. Stern	J. H. Chambers—A. Cataldo
WESTMINSTER ...	H. E. Burry	Edwin Davis	R. Buchanan

RHODE ISLAND

COLLEGE OF EDUCATION—Keene 2-3; Fitchburg 0-4; New Bedford 0-8, 0-11; Durfee 0-8; 1-0. SCORERS. No records.

WASHINGTON D.C

HOWARD UNIVERSITY—Lincoln 2-1, 4-3; Lock Haven 4-2; Bloomsburg 3-0; University of Havana 1-5; Seton Hall 5-1; Wilkies Coll 4-2; Sons of Italy 4-0; Versatile S.C. (N.Y.) 5-0; Hampton 2-0; Queens 11-2. 10-1-0. SCORERS. Fedo Blake, Ivan Ashtine, Drissa Yilla.
Jas. T. Chambers, coach; Fedo Blake, captain; Ronald Coleman, manager.

FIRST BOWL GAME

PENN STATE 2, UNIVERSITY OF SAN FRANCISCO 2.

PENN STATE—*Geo. Lawther; Wm. Yerkes, *Paul Margolf; *Wm. Kraybill, *Ralph Hosterman, *Richd Hannah; *Theo. Lieb, Harry Little, Jos. Lane, Ronald Coleman, Clarence Buss.

SAN FRANCISCO—Angelo Carmassi; Rosendo Diaz, Steve Negoesco; *Chas. Heredia, *Bob Lee, Olifunmi Osibogun; *Luis Ugarte, *Mario Ugarte, *Dick Baptista, *Henry Kirner, Jos. Matute.
Goals, Penn State, Little 2; San Francisco, Baptista 2.
Subs.Penn State, *Harry Lawroski; San Francisco, Mark Steinberg, Tony Ragusa.
Referess, Tom Erbe, Harry Lyons.
* 1950 Graduate.

1949 — ALL AMERICAN SELECTIONS

GOAL—†Theo. Bondi, Brockport; *Rodney Scheffer, Brown; Wm. Milhaven, Cortland; John Billington, Princeton; *Eli Jarmalowsky, Brooklyn.

Society for American Soccer History

RIGHT FULLBACK—*Jas. Blozie, Univ. Conn.; *Doug Carleton, Lehigh; *Dan Masias, Navy; Carl Spaeth, Haverford.
LEFT FULLBACK—Stephen Negoescu, U. San Francisco; Robert Simpson, Temple; Robt. Colquhoun, Univ. Penn. *John Wynn, Lafayette.
RIGHT HALBACK—*John Dunbar, Amherst; Jas. Hanna, Seton Hall; †Richd. Hannah, Penn State; †*Wm. Kinling, Johns Hopkins; *Wm. Kraybill, Penn State.
CENTER HALFBACK—Gerald Mahrer, Brooklyn; †*John Hogan, Springfield; †*Jos. McLernan, Navy; *Robt. Wood, Trinity.
LEFT HALFBACK—Don Thompson, Brookport; Fummi Oshibogun, Univ. San Francisco; Ralph Stern, Westchester; Dan Wardrop, Army.
OUTSIDE RIGHT—*Godfrey Nelson, Trinity; †*Carl Fetterolf, Univ. Conn.; *Buckley Shane, Swarthmore; †*Howard Whatford, Brockport.
INSIDE RIGHT—†Harry Little, Penn State; †Chas. Weiss, Harvard; †Jas Belt, Univ. Maryland; †Martin Kelly, Seton Hall.
CENTER FORWARD—Clemont Grillo, Brooklyn; *Fred Barlow, Temple; †Derl Derr, Cornell; Richd. Gigon, Lehigh.
INSIDE LEFT—†Walt Lownes, Univ. Penn; Paul Shipley, Haverford; *Jay Geiger, Trinity; *Jonathan Spivak, Harvard.
OUTSIDE LEFT—†Louis Dollarton, Westchester; Gunter Meng, Cornell; Jos. Matute, Univ. San Francisco; *Merritt Baldwin, Univ. Conn.

† On 1948 selections. * 1950 Graduate.

ALL-NEW ENGLAND

GOAL—†*Rodner Scheffer, Brown; Don Maurer, Wesleyan.
RIGHT FULLBACK—†*Jim Blozie, Connecticut; *Sam Gentiles, Williams.
LEFT FULLBACK—*Arlindo Jorge, Mass.; *Dick Scully, Harvard.
RIGHT HALFBACK—†*John Hogan, Springfield; G. Estrada, Dartmouth.
CENTER HALFBACK—*Herrick Drake, Harvard; Jan Ohms, Connecticut.
LEFT HALFBACK—†*John Dunbar, Amherst; †*Robt. Wood, Trinity.
OUTSIDE RIGHT—†*Carlos Fetterolf, Connecticut; *Bert Zenaty, Springfield.
INSIDE RIGHT—†*Chas. Weiss, Harvard; Frank McManus, Williams; Alex Bennett, Tufts.
CENTER FORWARD—*George Cleveland, Connecticut; *John Winton, Mass.
INSIDE LEFT—*Richlieu Morris, Tufts; †*Jonathan Spivak, Harvard.
OUTSIDE LEFT—†*Merritt Baldwin, Connecticut; C. Nelson, Trinity.

† All-American Selections. * 1950 Graduate.

ALL-NEW YORK

GOAL—†Theo Bondi, Brockport; †Wm. Milhaven, Cortland.
RIGHT FULLBACK—*Dick, Cortland; Internicola, Brockport.
LEFT FULLBACK—Wright, Cortland; *Fleischmann, Queens.
RIGHT HALFBACK—*Auchampaugh, Ithaca; *Rhinehart, Brockport.
CENTER HALFBACK—†Mahrer, Brooklyn; *Witter, Cortland; *Gardiner, Cornell.
LEFT HALFBACK—†Wardrop, Army; †Thompson, Brockport.
OUTSIDE RIGHT—†*Whatford, Brockport; *McKinney, Cornell.

Society for American Soccer History

INSIDE RIGHT—Ellithrope, Cortland; Halfin, Ithaca.
CENTER FORWARD—†Grillo, Brooklyn; †Derr, Cornell.
INSIDE LEFT—*Flint, Cortland; Knickerbocker, Champlain.
OUTSIDE LEFT—†Meng, Cornell; *Guion, Army.
† 1949 All-American Selections. * 1950 Graduate.

ALL-MIDDLE ATLANTIC CONFERENCE (Pa.-N. J.)

S—Outstanding Performance. AA—Demonstrating All-American Ability.

NORTHEAST

		OS	AA
G.	*Leive—Stevens	6	0
R.B.	†*Wynn—Lafayette	12	6
L.B.	†*Carlton—Lehigh	10	3
R.H.	*Pedersen—Rutgers	10	3
C.H.	*Lucine—Haverford	10	8
L.H.	Kullesied—Stevens	9	5
D.R.	†*Shane—Swarthmore	11	7
I.R.	†Gigon—Lehigh	14	10
C.F.	AlYasir—Swarthmore	18	12
I.L.	Rollo—Muhlenberg	7	1
O.L.	Jones—Haverford	8	7
C.H.	*Peterson—Ursinus	8	2
C.H.	*M. Downey—Stevens	9	5
L.H.	Ferrante—Stevens	6	4
C.H.	Clark—Swarthmore	10	3
C.H.	Armstrong—Lafayette	6	0
I.L.	†Shipley—Haverford	10	2
O.L.	Nammo—Lafayette	7	1
O.L.	Willmott—Swarthmore	7	2
O.L.	*Woodcock—Rutgers	4	0

SOUTHWEST

	OS	AA
*Watkins—Gettysburg	16	5
Tilley—Washington	10	1
*Fuller—Bucknell	18	6
*Shultz—F. & M.	5	1
Royals—Gettysburg	16	5
*Murray—Delaware	12	4
*Daga—Drexel	11	2
†*Kinling—Johns Hopkins	14	9
Linde—Drexel	17	3
*Raynor—Bucknell	18	7
*Winnfrey—W. Maryland	4	0
Shoemaker—Washington	8	3
*Horney—Delaware	10	5
Steir—Drexel	11	1
Bower—Washington	8	2
*Machamer—Bucknell	8	0
*Morgan—Johns Hopkins	9	3

† 1949 All-American Selections. * 1950 Graduate.

ALL-CALIFORNIA CONFERENCE

GOAL—Angelo Carmassi, Univ. S. F.; Anthony Fernandez, S.F. State.
FULLBACKS—Steve Negoesco, Univ. of S. F.; Ted Belknap, Stanford; Neil Becker, S.F.C.C.; Miguel Vegas, Santa Clara, Adam Gaitan, Calif. Aggies.
HALFBACKS—Robert Lee, Univ. S. F.; Bob Degrazia, Univ. of Calif.; Charles Heredia, Univ. S.F.; Amos Salvador, Stanford.
FORWARDS—Kaya Apaydin, Univ. of Calif.; Richard Baptista, Uuniv. S.F.; Ernie Feibusch, S. F. State; Luoie Ugarte, Univ. S. F.; Paul Laitoa, Santa Clara; Bob Cannon, S.F. State; Joe Matute, Univ. S.F.

NATIONAL SOCCER COACHES ASSOCIATION OF AMERICA

Annual meeting Brooklyn College, Brooklyn, N. Y.
January 12, 13, 14, 1950

President	Patrick F. O'Connor	Carnegie Inst. of Technology
1st Vice-President	George Ritchie	Wethersfield H.S. Conn.

Society for American Soccer History

2nd Vice President	Bruce Monroe	Harvard University
3rd Vice-President	T. Fred Holloway	Cortland State Teachers, N.Y.
Secretary-Treas.	Glenn Warner	U.S. Navy Academy, Md.
Asst. Secy.-Treas.	E. Marvin Allen	University of North Carolina
Editor, Newsletter	R. W. Schmelzer	R. P. I. Troy, N. Y.

COMMITTEES

ANNUAL MEETING — Bruce Munro and Glenn Warner, Ch.; Huntley Parker, Earle Waters, Wm. Jeffrey, Arthur Horrocks.

CLINIC—Wm. Jeffrey, Ch; John Wood, Wm. Garry, Ray Bernabei, Carl Reilly, Chas Scott.

COACHING — Carl Reilly, Ch; Edgar Redington, Gene Ringsdorf, Bert Watling, John Brock.

FINANCE — Glenn Warner, Ch; Marvin Allen, Bruce Munro, George Ritchie, Robert Dunn.

HIGH SCHOOL, RATING — John Wood, Ch; Si Yudell, Dan Test, Bartlett Boyden, George Ritchie, Gene Ringsdorf.

HONOR AWARD — Lawrence Briggs, Ch; John Squires, Huntley Parker, Bartlett Boyden, Howard DeNike.

U. S. CO-CHAMPIONS

PENN STATE COLLEGE



BACK ROW L. TO R. — *James Daugherty, George Emig, Phillip Spurling, *George Lawther, Douglas Deffenderfer, John Kurty, William Yerkes, Joseph Lane, Ronald Coder, *Spencer Boyer, *Richard Yeagley, *Harry Lawroski, William Jeffrey, Coach.
FRONT ROW L. TO R. — *Peter Buzad, *William Kraybill, Clarence Buss, Harry Little, *Ralph Hosterman, *Richard Hannah, *Paul Margolf, *Theodore Lieb, Ronald Coleman.
*** 1950 Graduate.**

Society for American Soccer History

UNIVERSITY OF SAN FRANCISCO



BACK ROW L. TO R. — Rosendo Diaz, Bob Lommori, Mel Riccardi, Mark Steinberg, *Charles Heredia, Steve Negoesco, *Henry Kirner, Angelo Carmassi, *Bob Lee, Joe Gumina, Manager.

FRONT ROW L. TO R. — Tony Ragusa, *Luis Ugarte, Joe Matute, *Mario Ugarte, Olifunmi Osibogun, *Dick Baptista, Coach Gus Donoghue.

*** 1950 Graduate.**

MEMBERSHIP — Glenn Warner, Ch; Marvin Allen, Irvin Schmid, Chris Chachis, Si Yudell.

NEWSLETTER — Richard Schmelzer, Ch. & Ed.; Chas Scott, associate Ed.; Marvin Allen, Bus. Mgr.; John Wood, Scholastic Ed.; Irvin Schmid, Collegiate Ed.

NOMINATING — Chas. Scott, Ch.; Lawrence Briggs, Jas Reed, Edgar Fielding, Jos. Kennaway.

PUBLICITY — Milt Miller, Ch.; Harold Shetter, Paul Hawk, Richard Havel, Louis Spealler.

PLAYOFF — Jim Smith Ch.; Tom Dent, Bruce Munro, Richd Schmelzer, Marvin Allen.

REFEREES — Harry Rodgers, Ch.; Jas Walder, Leo Netter, Sam Galin, Fred Coggins.

SECONDARY SCHOOLS — Hugh Barron, Ch.; Leo Netter, Allen Towbin, Walter Bahr,, John Kalloch.

VISUAL AIDS — Glenn Warner, Ch.; Carl Reilly, A. W. March, Jim Smith, Chas. Scott, Eric DeGroat.

1949 OUTSTANDING TEAMS

NATIONAL—University of San Francisco, Penn State, co-champions; Cornell.

NEW ENGLAND—Amhers College **PENNSYLVANIA**—Temple University.

Society for American Soccer History

NEW JERSEY—Seton Hall College. **SOUTHERN**—U.S. Naval Academy.
NEW YORK—Brooklyn College .

SECONDARY SCHOOLS

CONNECTICUT—Wethersfield.
ILLINOIS—Chicago, Lane Tech.; Suburban, Sterling Morton.
MASSACHUSETTS W—Ludlow.
MARYLAND—Baltimore, Mount St. Joseph; Baltimore County, Dundalk; Arundel County, Annapolis.
MISSOURI—St. Louis University.
NEW ENGLAND—Southern, New Berford Vocational; Prep., Cheshire.
NEW JERSEY—No. 1. Hightstown, No. 2 Harrison, No. 3 Hackensack, No. 4 Trenton. Parochial, Trenton Catholic; Prep., Lawrenceville.
NEW YORK—City, Glover Cleveland; Central, Cincinnatus; Western, Brighton. Nassau County, Sea Cliff.
PENNSYLVANIA—Central, Center Hall; Philadelphia, North East; Inter Academic Friends; Suburban, Haverford High; Pittsburgh, Connelly High; Western, South Fayette.

200 HUNDRED YEARS OF SOCCER HERE



MOST DESERVING OLD TIMERS.' The two oldsters are 86-year old William Tyas and 76-year old John Bedford receiving their trophies from William Hawkins, president of the Old Timers' Association, who admits to nothing more than the early 50's.

(Story on Page 14)

Society for American Soccer History

DOMINION OF CANADA

By W. McLAREN McKELLAR, Secretary D.F.A.

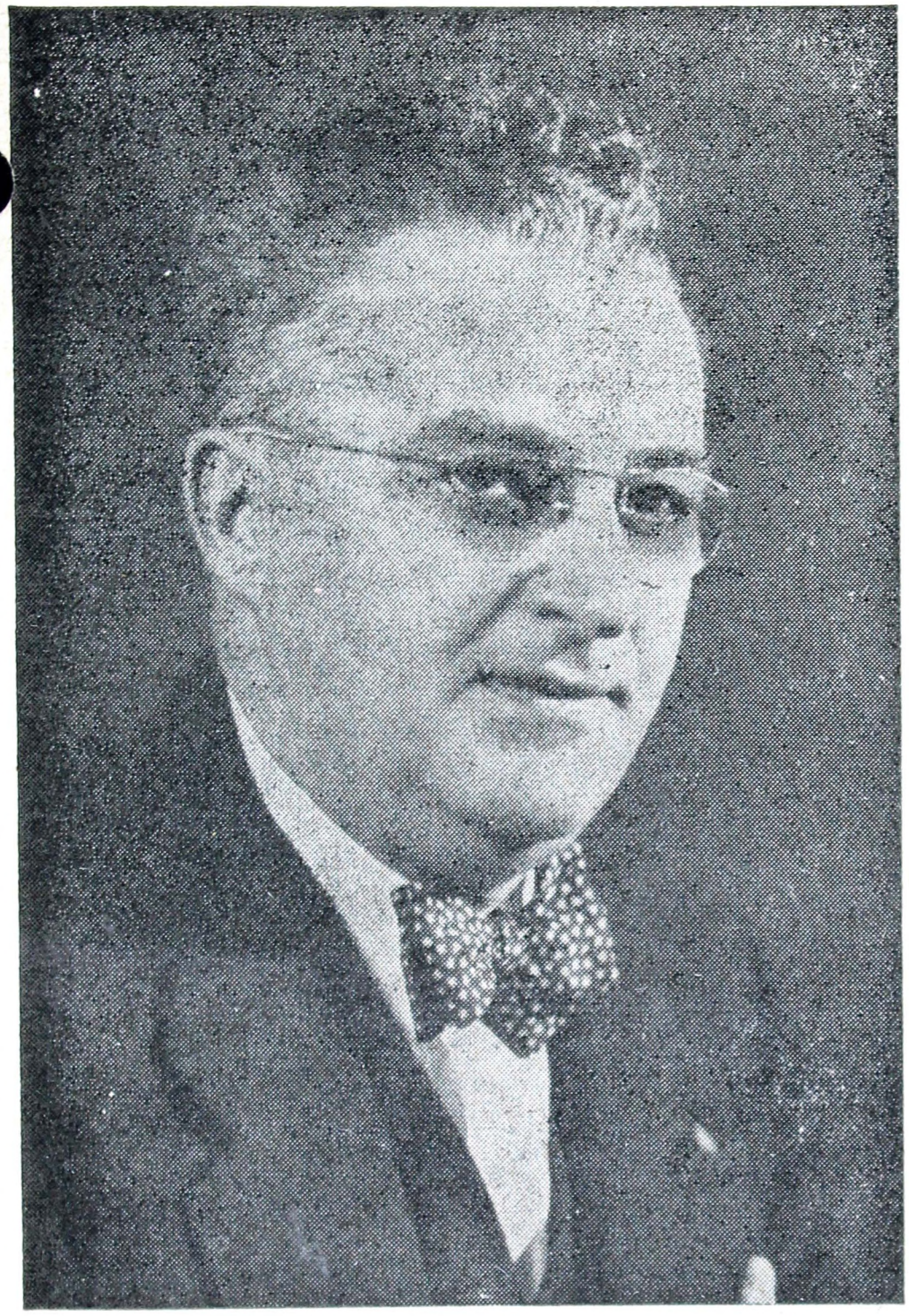

W. McLaren McKellar

In Canada soccer has to take second place to hockey in the Winter and baseball in the Summer. Nevertheless soccer is one of the oldest sports in a sport-loving country.

In 1888 Canada sent a team to Britain and its record was equal to any attained by other Colonial or Dominion teams. Unfortunately the sport did not maintain the progress expected by enthusiasts.

With the exception of British Columbia soccer is a Summer game. In Winter much of the country is snow-covered. It is not uncommon for games to be played with the temperature in the 80's. Visiting teams have found it extremely trying.

In Canada distances are vast and population scanty and organization of fixtures presents many difficulties. There are local leagues in every Province and a Provincial championship for senior clubs.

The Dominion of Canada F.A. is the overall authority. It comprises Provincial Associations or where none exist, as in the more remote Provinces, District Associations. Each Province has a number of District Associations to which the leagues are affiliated. Provincial Associations vary in importance with Quebec, Ontario and British Columbia being well organized. The sparsely populated Prairie Provinces, Alberta, Manitoba and Sasatchewan have fewer leagues. However the number of clubs is growing.

The Dominion Challenge Cup is the National competition. The final is played in August, the venue altering yearly from West to Mid-West to

Society for American Soccer History

East. In 1947 the final was played in Winnipeg, 1948 in Toronto, 1949 in Calgary. The trophy was presented by the English F.A. and replaces the Connaught Cup. Despite the fact that British Columbia has to compete during its close season it holds the record number of championships.

The sport is almost entirely amateur, less than one percent of the players being professionals. There is no maximum or minimum wage.

Many of Canada's players come from the United Kingdom or are children of British immigrants. The recent decline in immigration has dried the source and the lack of new blood is seriously felt.

The future of the sport rests with its young players. The most serious handicap is lack of organized coaching and the absence of an adequate youth training programme. In some Provinces school teams are allowed to enter junior competitions, in others it is forbidden. During the school holiday periods boys are allowed to play in junior competitions but such competitions are rare in most Provinces.

Realizing that the future of the game depends on its youth, the D.F.A. hopes for an adequate scheme in the near future. There is every reason to believe that Canada soon will hold its own against foreign competition.

With 20,000 fans at the Newcastle-Kamraterna game last year and 25,000 this Summer at the All-England-Manchester United game, Toronto appears to be headed for the berth as the biggest soccer city in North America.

During this Summer our players in Vancouver forced the All-England and Atlas F.C. of Mexico teams into tied games while Toronto downed the Jonkopping of Sweden 3-1 and held the All-England combination to a 4-1 win. Montreal held Manchester United to a 2-1 score and Victoria lost to the All-England by the odd-goal. It can be done.

Secretary, W. McLaren McKellar, 5699 Chabot St., Montreal 35, Que., TA 8256.

Honorary President, Dr. O. J. Todd, AB. PhD. F.R.S.C.

Patrons, His Excellency the Governor General Viscount Alexander, L. P. Peto, James Wilson, O.B.E.; N. J. Howard, P. H. Whalley, the Hon. T. L. Church.

Representative to the F.A., W. A. McAdam C.M.G., B.C. House, 1 Regent St., London S.W. 1, England.

President, C. E. Pinnell. Vice President, J. A. Nolan.

Council, Alberta, J. Snowden; British Columbia, J. M. Richardson; Manitoba, G. Anderson; Ontario, A. M. MacGregor; Quebec, W. R. Vogan; Saskatchewan, J. Ritchie.

NATIONAL CHAMPIONS

1913 Norwood Wanderers
14 Norwood Wanderers
15 Winnipeg Scots
16-18 No Competition
19 Grand Trunk, Que.
20 Westinghouse, Ont.
21 Toronto Scots
22 Calgary Hillhurst
23 Nanaimo, B. C.
24 Un. Weston, Winnipeg
25 Toronto Ulsters
26 Un. Weston, Winnipeg
27 Nanaimo, B. C.
28 Westminister Royals, B. C.
29 C. N. R. Montreal.
30 Westminister Royals, B. C.
31 Westminster Royals, B. C.
32 Toronto Scots

Society for American Soccer History

33 Toronto Scots
34 Verduns, Montreal
35 Aldreds, Montreal
36 Westminister Royals, B. C.
37 Johnston Nationals
38 North Shore, Vancouver
39 Radials, Vancouver
40- 45 No Competition
46 Toronto Ulsters
47 St. Andrews, Vancouver
48 Carsteel, Montreal
49 North Shore, Vancouver
50

CANADIAN CHALLENGE CUP

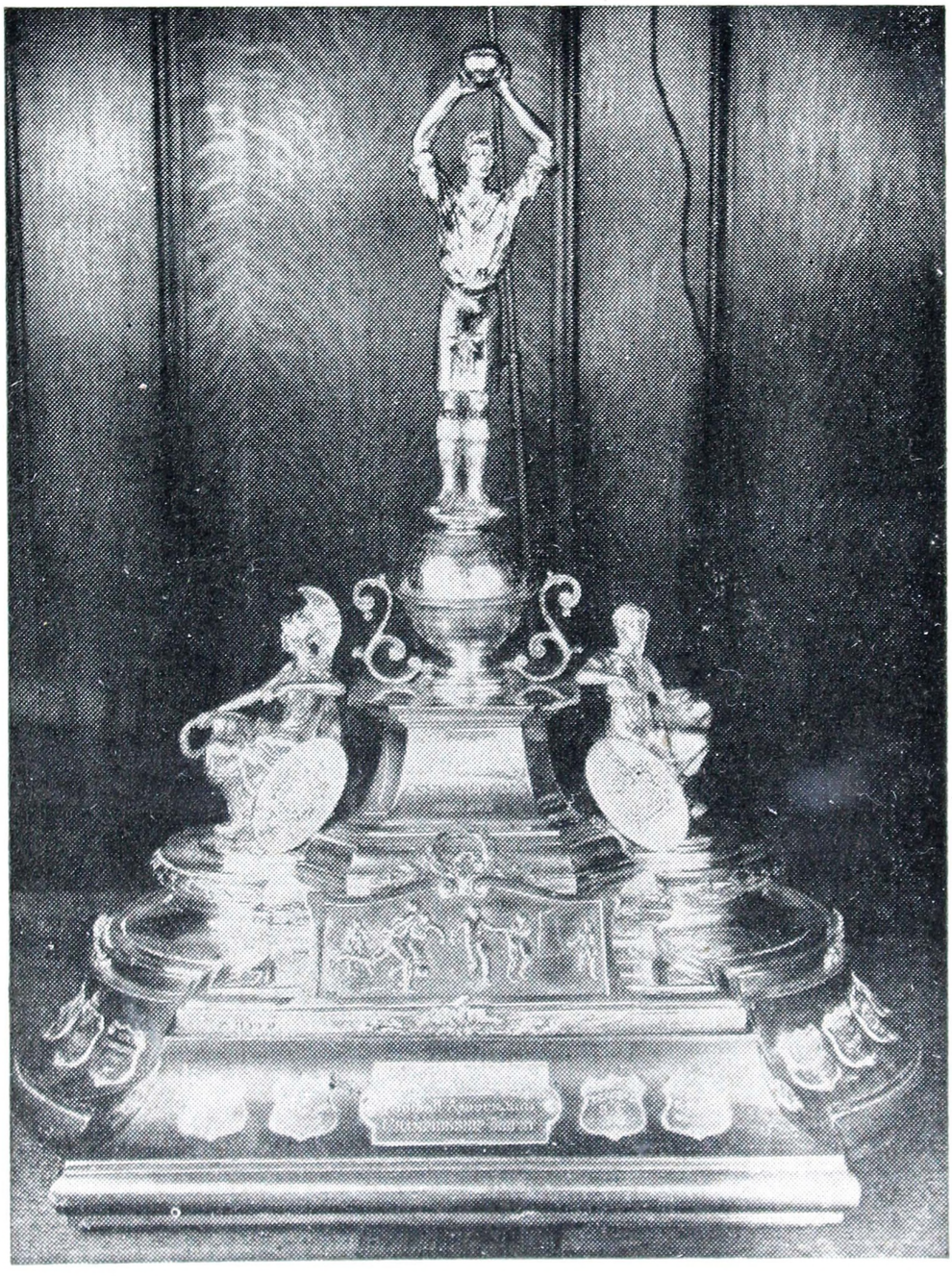

PROVINCE OF ONTARIO F.A. COMMISSION

Secretary, A. M. MacGregor, 59 Primrose Ave., Toronto 4. OL. 2495.
W. Entwistle, Chairman; Arthur Arnold, Hamilton and Dist. and Niagara Dist.; Maurice Honeyman, Essex Co. F. A. and W. Ontario; Tom McCrae, Ontario Jr. Assn'; Major A. L. Steele, M.B.E. Toronto and Dist. and E. Ontario; A. M. MacGregor, Council Member D.F.A.

Society for American Soccer History

BAY OF QUINTE F. A. — By W. L. DIGBY, President

Secretary, H. Whyte, 183 James St., Belleville. 4050J
President, L. W. Digby, 139 W. Bridge St., Belleville.
V. Pres., W. Harvey, 282 Foster Ave., Belleville.
Exec. Member, A. Machola, 16 Haig St., Batawa.
Exec. Member, R. Baverstock, 21 Boswell St., Belleville.

CLUBS

Army, Navy, Air Force Vets, R. Gallinger, 58 Murney St., Belleville.
Batawa, A. Machola, 16 Haig St., Batawa.
Belleville Navy, R. Longhurst, 161 James St., Belleville.
Belleville United, S. Scott, 49 Wallbridge Rd., Belleville.
Trenton Flyers, F/Sgt. Periton, RCAF Station, Trenton.
Trenton Merchants, J. Helyer, RR No. 6, Trenton.
6 R. D. (RCAF) Sgt. Longstaff, 6 RD (RCAF) Trenton.

1949 STANDINGS

	P	W	L	T	F	A	P
Batawa	16	13	2	1	53	9	27
6 RD	16	11	4	1	46	18	23
Northern Electric	16	8	6	2	28	20	18
Belleville Un.	16	3	11	2	15	42	8
Trenton Merchants	16	1	13	2	10	63	4

Belleville Charity Cup, 6 RD. Trenton Challenge Cup, Northern Electric.

CHATHAM AND DISTRICT F. A. — By W. SHULVER, Secretary

Secretary, W. Shulver, 151 Forest St., Chatham. 3089R
President, Alf. Mills, 139 Adelaide St. S.
V. President, John Webel, 31 Delaware Ave.
Council, Wm. Orr, Orchard Heights; Jim Seton, 204 William St. S; P. Peck, 59 Sheldon Ave.

CLUBS

Dauws-Sales, R. C. Royce, 123 Water St., Wallaceburg.
Flying Dutchman, George Bruinsna, 85 Willowmac.
Mitchells Bay, R. Burke, RR 1, Electric.
Ontario Steel, A. J. Ernteman, 230 Wellington W.

Kent Regiment, John Burke, 41 St. Patrick.
Raleigh-Harwich, Stan Srokosy, RR 3, Blemheim.

1949 LEAGUE STANDING

1. Mitchells Bay; 2. Ontario Steel; 3. Legion; 4. Raleigh-Harwich; 5. Wallaceburg.

Sportsman Trophy, Canadian Legion; Injured Players Cup, Ontario Steel.

ESSEX COUNTY F. A. — By M. W. HONEYMAN, Secretary

Secretary, M. W. Honeyman, 2005 Iroquois St., Windsor. 3-5915
President, Walter Lomas, 1636 May Ave., Windsor, 2-4655
V. President, John Dickie; Treasurer, Robert Metcalf; Directors, J. Ross Paisley; Benny McCourt; Council Member O.F.A., M. W. Honeyman; Essex Co. Juvenile Association, J. Points, R. Suddick.

Society for American Soccer History

CLUBS

Army, Navy, Air Force, Cy Francis, 2218 Fraser Ave., Windsor.
Coboto, Tom Marcocchio, 388 Logan Ave., Windsor.
Corinthians, Paul Holden, 616 Church St., Windsor.
Kossuth, Louis Gresi, 939 Elsmere Ave., Windsor.
St. Angela, St. Angela Church, Windsor.
Teutonia, J. Manherg, 1173 Marion Ave., Windsor.
U.A.W. — C.I.O., Robert Stoddart, 1430 George Ave., Windsor.
White Eagles, Bob Voncina, 985 Pellissier St., Windsor.

The Corinthians, a team ranging from 16 to 25 years of age, won the league championship, the Border City Star Cup and were runners-up in the Western Ontario Cup. U.A.W. — C.I.O. won the Campbell Charity Cup and the Firemen's Field Day Cup. The latter is emblemic of city championship.

JUNIOR AND JUVENILE F. A. OF TORONTO — By G. NIBLETT, Sec'y.

Secretary, G. Niblett, 101 Boultbee Ave., Toronto, HA 1514
President, T. McCrea, 18 Mack Ave., Toronto.
V. President, F. Ryles; Recording Secretary, E. Heyes; Registration Secretary, E. Martin.

CLUBS

JUNIORS

Danforth Albions, R. Stark, 30 Kenworth Ave., Toronto.
East York, E. Heyes, 235 Westwood Ave., Toronto.
Mount Dennis, G. Collins, 78 Greendale Ave., Toronto.
Shamrocks, H. Benson, 234 Withrow Ave., Toronto.
West End, F. Ryles, 98 Bristol Ave., Toronto.

JUVENILES

East York, A. Percy, 12 Lankin Blvd., Toronto.
Hamilton Un., E. Chambers, 1396 Barton St. E, Hamilton.
Maple Leaf, T. McCrea, 18 Mack Ave., Toronto.
Scarboro Un., A. D. Wiseman, 32 Craiglee Ave., Toronto.

BANTAMS

Ady F. C., G. J. Bodi, 20 Victor Ave., Toronto.
East End., Geo. Niblett, 101 Boulbee Ave., Toronto.
East York, S. Wadlow, 241 Queensdale Ave., Toronto.
Maple Leaf, T. McCrea, 18 Mack Ave., Toronto.

The East York Juvenile Club swept the board winning the Ontario Cup, City championship, McCrea Cup, Injured Players Cup and the McGregor Cup.

Riverdale Imperials won the Junior League championship and the Ontario Junior and Intermediate championship.

East End Canadians were the City of Toronto champions.

LONDON AND DISTRICT F. A. — By L. D. BRAMLEY, Secretary

Secretary, L. D. Bramley, 95 Water St., Stratford, Ont.
President, D. McClenagan, 119 Langarth, London.
V. President, G. Morris, 973 Dame St., London.
Council Members, A. Mitchell, 552 Colborne St., London; C. Whitelaw, 101 Adelaide St., London; J. Dennet, 183 Garefield Ave., London; A. Richard-

Society for American Soccer History

KINGSTON UNITED



Front Row L. to R. — W. Douglas, C. Neidbala, G. Grundy, W. Berry, M. Gargaro, R. Dark, R. Russell.
Second Row L. to R. — H. Pollard, J. Wilkin, J. Poulton, J. Wassell, G. Watkins, R. Machin, G. Forrest.
Third Row L. to R. — N. Taylor, W. Woods, N. Cantarutti, D. Folger, J. Stafford, H. Pyle, G. Folger.

Society for American Soccer History

son, 548 Talbot St., London; D. Mitchell, 51 Milton St., Stratford; S. Foster, 7 George St., Stratford; Cpl. S. Verth, RCAF Station, Centralia.

CLUBS

London C.N.R., J. Henderson, 97 Inkerman St., London.
London City, G. Morris, 973 Dame St., London.
Sarnia Imperials, S. Barr, 561 George St., Sarnia.
Centralia R.C.A.F., F/O B. Moir, R.C.A.F. Station, Centralia.
Stratford A.N.A.F.V., L. D. Bramley, 95 Water St, Stratford.
Referee Secy, A. E. Richardson, 548 Talbot St., London.

1949 STANDINGS

1. London C.N.R.; 2. Stratford C.N.R.; 3. Guelph City; 4. London City; 5. Bradford; 6. Brussels; 7. Woodstock; 8. London Garrison.

Ontario F. A. Challenge Cup — Stratford C.N.R.

NATIONAL SOCCER LEAGUE (WESTERN SECTION) — By F. W. THIRKETTLE, Secretary

Secretary, F. W. Thirkettle, 2 Beck Ave., Toronto 13. GR 6066
Chairman, Arthur Arnold, 154 McNab St. S. Hamilton.
V. Chairman, Richard Sleeman, 2107 Yonge St., Toronto.

CLUBS

East End Canadians, R. C. Robertson, 1 The Oaks, Bain Ave., Toronto.
Hamilton City, E. Gracie, 32 Cluny Ave., Hamilton.
Oakwoods, F. W. Thirkettle, 2 Beck Ave., Toronto.
St. Andrews, G. W. Anderson, 77 Pears Ave., Toronto.
*Scottish, D. Crombie, 1690 Queen St. E, Toronto.
*Ikrainian, Dr. John W. Kucherepa, 268 High Park Ave., Toronto.
*Ulster United, W. Rayfield, 10 Snowden Ave., Toronto.
Westinghouse, T. T. Laurie, 20 Rosslyn Ave. N, Hamilton.
*1950 entries.

1949 STANDINGS

	P	W	L	T	P
East End Canadians	15	14	1	0	28
Westinghouse	16	10	3	3	23
St. Andrew's	16	9	4	3	21
Hamilton City	16	2	13	1	5
Oakwoods	16	1	14	1	3

Westinghouse won the league playoffs for the A. H. Frame Cup and represented Eastern Canada in the Dominion Challenge Cup final.
St. Andrew's defeated East End to win the British Consuls Cup and the Toronto and District championship. East End won the Hiram Walker Trophy.

ONTARIO (EASTERN) F. L. — By L. W. DIGBY, President

Organized 1950
Secretary, Lt. R. Windower, H.M.C.S. CATARAQUI, Kingston.
President, L. W. Digby, 139 W. Bridge St., Belleville.
Registration Secretary, J. Poulton, c/o Aluminum Laboratories, Kingston.

Society for American Soccer History

CLUBS

Belleville Navy, R. Longhurst, 151 James St., Belleville.
Belleville United, S. Scott, 49 Wallbridge Rd., Belleville.
Brockville, F. W. Whiten, c/o Davis Inn, RR 1, Brockville.
Kingsotn United, N. Taylor, 219½ Princess St., Kingston.
Kingston Vimy, Lt. A. E. Anderson, 71 Mack St., Kingston.
Ottowa Combined Services, Cpl. Wilde, Central Ordnance Depot, Ottowa
Peterboro V.E.W., A. L. Featherstone, 747 Aylmer St., Peterboro.

SUDBURY AND DISTRICT F. A. — By Wm. GAYLOR, Secretary.

Secretary, Wm. Gaylor, 134 Baker St., Sudbury.
President, Harry Andrews, 280 Pine St., Sudbury.
V. President, Andrew Rayne, 175 Simcoe St., Sudbury.
Treasurer, Bruno Lenarduzzi, 373 Isabel St., Sudbury.

CLUBS

Adria, C. Glabanic, 361 Lorne St., Sudbury.
Caruso, B. Lenarduzzi, 373 Isabel St., Sudbury.
Creighton, R. McLeod, Creighton Mine, Ont.
Garson, A. Muir, Garson, Ont.
Mine Mill — Local 598 — D. Williams, 784 Charlotte St., Sudbury.
Ryan, J. Nemis, 203 Gilman St., Sudbury.
Sicz, N. Waler, 475 Frood St., Sudbury.
White Eagles, P. T. Lange, 182 Elgin St., Sudbury.

1949 STANDINGS

	P	W	L	T	F	A	P
Garson	10	6	0	4	40	18	16
Ryan	10	5	2	3	26	16	13
Mine Mill	10	3	3	4	20	23	10
White Eagles	10	4	5	1	26	22	9
Creighton	10	3	5	2	19	29	8
Caruso	10	2	8	0	12	35	4

The Ryan Club won the Sudbury Daily Star Trophy and with it the Northern Ontario championship. Garson was the runner-up.
Garson won the McCrea Charity Cup with Ryan Club as runner-up.
Evans Cup. Not completed. Ryan, Mine Mill and Creighton remaining.

PROVINCE OF QUEBEC F. A. — By CHAS FALLON, Treasurer

Secretary, N. Gillespie, 2055 Lincoln Ave., Montreal.
President, P. Nolan, 11881 O'Brien Blvd., Ville St. Laurent.
V. President, E. MacLaine, c/o Accounting, 1401 St. Patrick St., Montreal.
Treasurer, C. Fallon, 6188 Durocher St., Montreal.
Board Members, E. Anderson, 250 Lansdowne Ave., Westmount.
D. Glendinning, 6336 Briand St., Montreal.
C. White, 1430 Fayolle St., Verdun.
N. Price, c/o Personnel, Can. Vickers Ltd., Montreal.
R. Spencer, 4990 Westmore Ave., N.D.G., Montreal.

LEAGUE SECRETARIES

National S. L., W. Howie, 824 Godin Ave., Verdun.
National City S. L., J. Stevenson, 672 Manning Ave., Verdun.

Society for American Soccer History

CANADIANS ABROAD

In 1888-89 a Canadian Association team played a series of games agains the premier clubs of England, Northern Ireland and Scotland. Canada won 9, lost 9 and tied 5 games.

1891-92 another visit by Canadians to Great Britain resulted in the following:

Sept.	12	Canada	2	Ireland	5	Belfast
	21		1	Wales	1	Wrexham
Oct.	5		1	Scotland	5	Glasgow
	12		1	Wales	2	Wrexham
Dec.	19		1	England	6	Oval

ENGLISH ASSOCIATION TOURS IN CANADA — 1926

Played 18, Won 18. Goals: 92 against 15.
E. Barkas (Huddersfield), J. W. Booker (Nunhead), G. Clifford (Portsmouth), B. Cross (Burnley), H. Foxall (Portsmouth), T. Gale (Barnsley), G. O. Harkus (Southampton), W. N. Harris (Birmingham) D. B. N. Jack (Bolton Wand) A. E. Keeping (Southampton), T. Magee (W. Bromwich Albion), W. E. Rawlings (Southampton), R. Sewell (Blackburn Rov), J. Smith (Bolton Wand), P. Tunstall (Sheffield Un.), R. Wainscoat (Leeds Un.) J. Waugh (Sheffield Un.), O. Williams (Middlesboro).

May	24	All-England	5	Montreal	3
	26		3	Hamilton	0
	29		6	Toronto	0
June	2		9	Port William	0
	5		2	Winnipeg	1
	7		2	Regina	0
	9		3	Lethbridge	1
	12		7	Calgary	4
	16		5	Vancouver	1
	19		3	Nanaimo	0
	23		5	Victoria	1
	26		9	Vancouver	1
	29		5	Edmonton	0
July	1		7	Saskatoon	0
	3		7	Winnipeg	0
	7		5	Timmins	0
	10		7	Toronto	2
	15		2	Montreal	1

1931

Played 17, Won 17. Goals: 107 against 12.
S. Alexander (Hull City), L. Barry (Leicester City), E. R. Bowden (Plymouth Argyll), A. F. Campbell (Huddersfield T) J. Cookson (W. Bromwich Alb), F. Hibbs (Birmingham), E. W. Hine (Leicester City), H. Houghton (Exeter City), J. Jennings (Middlesboro), J. H. McClure (Everton), T. Magee (West Bromwich Alb), J. H. O'Dowd (Burnley), L. Oliver (Fulham), W. G. Roughton (Huddersfield T), G . E. Shaw (W. Bromwich Alb), J. W. Smith (Portsmouth), K. C. Tewesbury (Middlesboro Univ.), T. Urwin (Sunderland).

Society for American Soccer History

May	25	All-England	4	London & District	1
	27		11	Quebec Association	0
	30		4	Toronto & District	1
June	3		10	New Ontario Association	1
	6		2	Manitoba Association	0
	8		6	Regina & District	1
	10		6	Saskatoon & District	1
	13		2	Edmonton	
	17		7	Vancouver	
	20		8	Nanaimo City	2
	24		7	Victoria	0
	27		4	British Columbia	1
July	1		4	Calgary United	0
	3		3	Manitoba Association	1
	8		11	Ontario Association	2
	11		8	Hamilton & District	0
	15		10	National League	0

U.S. INTERNATIONAL GAMES

Played 32, Won 10, Lost 19, Tied 3. Goals 60 against 119.

	P	W	L	T	F	A
Argentine	3	3	0	0	26	4
Belgium	1	0	1	0	0	3
Brazil	1	0	1	0	4	3
Canada	4	2	2	0	7	14
Chile	1	1	0	0	5	2
Cuba	3	1	1	1	8	8
Eire	1	1	0	0	3	1
England	1	0	1	0	0	1
Estonia	1	0	1	0	0	1
Italy	3	3	0	0	17	1
Mexico	7	6	1	0	37	11
Norway	1	0	0	1	1	1
Paraguay	1	0	1	0	0	3
Poland	1	0	0	1	3	3
Spain	1	1	0	0	3	1
Sweden	1	0	1	0	2	3
Uruguay	1	1	0	0	3	0

RESULTS

ARGENTINE

1928 May 29	U.S.A.	2	Argentine	11	Amsterdam
1930 July 26		1		6	Montevideo
1937 July 15		1		9	Texas

BELGIUM

1930 July 13	U.S.A.	3	Belgium	0	Montevideo

BRAZIL

1930 Aug.	U.S.A.	3	Brazil	4	Rio de Janeiro

Society for American Soccer History

CANADA					
1925 June 27	U.S.A.	0	Canada	1	Montreal, Que.
1925 Nov. 8		6		1	Brooklyn, N. Y.
1926 Nov. 6		6		2	Brooklyn, N. Y.
1937 July 16		2		3	Texas
CHILE					
1950 July 2	U.S.A.	2	Chile	5	Rio de Janeiro
CUBA					
1947 July 20	U.S.A.	2	Cuba	5	Havana
1949 Sept. 14		1		1	Mexico City
1949 Sept. 21		5		2	Mexico City
ENGLAND					
1950 June 29	U.S.A.	1	England	0	Rio de Janeiro
EIRE					
1924 June 16	U.S.A.	1	Eire	3	Dublin
ESTONIA					
1924 May 25	U.S.A.	1	Estonia	0	Paris
ITALY					
1934 May 27	U.S.A.	1	Italy	7	Rome
1936 Aug. 3		0		1	Berlin
1948 Aug. 2		0		9	London
MEXICO					
1934 May 24	U.S.A.	4	Mexico	2	Rome
1937 Sept. 12		2		6	Mexico City
1937 Sept. 19		2		7	Mexico City
1937 Sept. 26		1		5	Mexico City
1947 July 13		0		5	Havana
1949 Sept. 4		0		6	Mexico City
1949 Sept. 18		2		6	Mexico City
NORWAY					
1916 Sept. 3	U.S.A.	1	Norway	1	Oslo
PARAGUAY					
1930 July 17	U.S.A.	3	Paraguay	0	Montevideo
POLAND					
1928 June 10	U.S.A.	3	Poland	3	Warsaw
SPAIN					
1950 June 25	U.S.A.	1	Spain	3	Rio de Janeiro
SWEDEN					
1916 Aug. 20	U.S.A.	3	Sweden	2	Stockholm
URUGUAY					
1924 May 29	U.S.A.	0	Uruguay	3	Paris

OLYMPIC GAMES

1924 EIGHTH OLYMPIAD AT PARIS

Sailed from New York on S.S. America May 10 following final tryouts at Paterson, N.J., May 4.

Dr. Aage E. Brix, Los Angeles (Calif.) A.C.
Samuel H. Dalrymple, Disston (Pa.) F.C.

Society for American Soccer History

Irving C. Davis, Fairhill (Pa.) F.C.
William J. Demko, Fleisher Yarn (Pa.) F.C.
James E. Douglas, Newark (N.J.) F.C.
Henry C. Farrell, Fairhill (Pa.) F.C.
William Findlay, Galicia (N.Y.) F.C.
Edward Hart, St. Matthew's (Mo.) F.C.
Raymond A Hornberger, Disston (Pa.) F.C.
Carl W. F. Johnson, Swedish-American (Ill.) F.C.
F. Burke Jones, Bridgeville (Pa.) F.C.
James H. Mulholland, Scott (N.J.) A.A.
Frederick E. O'Connor, Lynn (Mass.) G.&E.
James Rhody, Erie (N.J.) A.A.
Arthur G. Rudd, Fleisher Yarn (Pa.) F.C.
Andrew J. Stradan, Fleisher Yarn (Pa.) F.C.
Herbert Wells, Fleisher Yarn (Pa.) F.C.
George M. Collins, (Mass.) Manager
George H. Burford, (Pa.) Trainer
Peter J. Peel, (Ill.) President U.S.S.F.A.

OLYMPIC GAMES

May 25	United States	1	Estonia	0	Pershing Stadium, Paris
29		0	Uruguay	3	Stade Bergeyre, Paris

INTERNATIONAL

June 14	United States	1	Irish Free State	3	Dublin

EXHIBITION

June 10	United States	1	Poland	2	Warsaw

Against Esthonia. Douglas; Davis, Rudd; Jones, Hornberger, O'Connor; Findlay, Brix, Stradan, Farrell, Dalrymple. Goals, Stradan (Penalty).

Against Uruguay. Douglas; Davis, O'Connor; Johnson, Hornberger, Jones; Findlay, Wells, Stradan, Farrell, Dalrymple.

Against Irish Free State. Douglas; Mulholland, Ruddy; Demko, Hornberger, O'Connor; Davis, Wells, Stradan, Rhody, Hart. Goal, Hart.

1928 — NINTH OLYMPIAD AT AMSTERDAM

Sailed from New York May 10. Arrived New York June 26.

Robert Aitken, Caledonian (N.J.) F.C.
Albert Cooper, Trenton (N.J.) F.C.
James Cronin, Municipal League (Mo.)
John Deal, Wolfenden Shore (Pa.) F.C.
John Duffy, Independent (N.J.) F.C.
William Findlay, Galicia (N.Y.) F.C.
James Gallagher, Ryerson Juniors (N.J.) F.C.
John Kane, Municipal League (Mo.)
Rudolph Kuntner, New York Giants (N.Y. F.C.
Raymond Littley, Centennial (Mass.) A.C.
John Lyons, Fore River Shamrocks (Mass.) F.C.
Joseph Murphy, Municipal League (Mo.)
Henry O'Carroll, Bayonne Rovers (N.J.) F.C.
John Rudge, Municipal League (Mo.)
Francis Ryan, Lighthouse (Pa.) F.C.

Society for American Soccer History

Harry Smith, Lighthouse (Pa.) F.C.
Elmer Schroeder, (Pa.) Manager
George H. Burford, (Pa.) Trainer

OLYMPIC GAMES

May 29	United States	2	Argentine	11	Amsterdam

INTERNATIONAL

June 11	United States	3	Poland	3	Warsaw

EXHIBITION

May 24	United States	1	Ajax	1	Amsterdam
26		6	Ajax	6	Amsterdam
June 1		2	Holland Olympic	3	Amsterdam
6		3	Werder	2	Bremen
10		3	Altona	4	Hamburg
12		0	Lodz	6	Lodz
13		0	Posnan	7	Posnan

Aganist Argentine. Cooper; Duffy, Smith; Ryan, Lyons, Aitken; Findlay, Deal, Kuntner, O'Carroll, Gallagher. Goals, Kuntner, O'Carroll.

1932 — 10th OLYMPIAD AT SAN FRANCISCO

No Soccer tournament.

1936 — 11th OLYMPIAD AT BERLIN

The squad, 14 of whom were native born, sailed from New York July 15. Returned to New York August 29.

Charles Altemose, Philadelphia, Pa.
Francis Bartkus, Brooklyn, N.Y.
Edward Begley, St. Louis, Mo.
Julius Chimielewski, Trenton, N.J.
James Crockett, Philadelphia, Pa.
Robert Denton, Philadelphia, Pa.
William Fiedler, Philadelphia, Pa.
Andrew Gajda, Boston, Mass.
Frank Greinert, Brooklyn, N.Y.
Fred Lutkefelder, Philadelphia, Pa.
George Nemchik, Philadelphia, Pa.
John Olthaus, Brooklyn, N.Y.
Peter Pietras, Philadelphia, Pa.
Francis Ryan, Philadelphia, Pa.
Fred Stoll, Philadelphia, Pa.
Fred Zbilowski, Kearny, N.J.
John Zywan, Castle Shannon, Pa.
Elmer Schroeder, Philadelphia, Manager
Francis Cavanaugh, Philadelphia, Pa., Trainer
James Armstrong, Brooklyn, N. Y., Secretary to the U.S.S.F.A.
Albert Harker of Philadelphia, Pa., was selected but was unable to make the journey.

OLYMPIC GAMES

Aug. 3	United States	0	Italy	1	Berlin

Society for American Soccer History

EXHIBITION

July 29	United States	2	B.F.C. Victoria	2	Berlin
31		2	Union S.C.	1	Berlin
Aug. 9		1	Gau XI Mittlrhein	0	Cologne
12		1	Gau VIII Niedersachsen	4	Brement
17		3	Nordsachsen	2	Hanover

Against Italy. Bartkus; Greinert, Zbilowski; Crockett, Pietras, Altemose, Gajda, Nemchik, Lutkefedder, Fiedler, Ryan.

1948 — 14th OLYMPIAD AT LONDON

Sailed S.S. America, July 14. Arrived New York S.S. Brittanic. Aug. 21.

GOAL
Archie Strimmel, Curry Vets F.C.

FULLBACKS
Robert Annis, Simpkins F.C.
Manuel Martin, Ponta Delgada S.C.
Joseph Rego, Ponta Delgada S.C.

HALFBACKS
Walter Bahr, Philadelphia Nationals
Charles Colombo, Simpkins F.C.
Joseph Ferriera, Ponta Delgada S.C.
Cino Pariani, Simpkins F.C.

FORWARDS
Ray Beckman, De Andries K.C.
William Bertani, Simpkins F.C.
Steve Grivnow, Curry Vets F.C.
Ben McLaughlin, Phila. Nationals
Edward Souza, Ponta Delgada S.C.
John Souza, Lusitano S.C.
Rolf Valtin, Swarthmore University
Joseph J. Barriskill, Manager
Wilson T. Hobson, Asst. Manager
Walter J. Giesler, Coach

OLYMPIC

Aug. 2	United States	0	Italy	9	London

EXHIBITION

	United States	1	Luxemburg	1	London
	United States	2	China	2	London
	United States	2	Korea	0	London
	United States	4	R.A.F.	0	London
	United States	0	Norwegian Stars	11	Oslo
	United States	0	Irish Stars	5	Belfast

Against Italy. Strimmel; Rego, Martin; Colombo, Ferreira, Bahr; Beckman, J. Souza, Bertani, McLaughlin, E. Souza.

TOURNAMENT WINNERS

1908	London	— England	1928	Amsterdam	— Uruguay
1912	Stockholm	— England	1936	Berlin	— Italy
1920	Antwerp	— Belgium	1948	London	— Sweden
1924	Paris	— Uruguay			

WORLD CUP

1930 CHAMPIONSHIP

As a result of trial games played April 14, May 1 and 4 the following were selected: Andrew Auld, Providence; James Brown, New York Giants; James Douglas, New York Nationals; Thomas Florie, New Bedford; James Gallagher, New York Nationals; James Gentle, Philadelphia; William Gonsalves, Fall River; Bart McGhee, New York Nationals; George Moorhouse,

Society for American Soccer History

New York Giants; Bertram Patenaude, Fall River; Michael Slavin, Cleveland; Philip Slone, New York; Raphael Tracey, Ben Millers; Frank Vaughan, Ben Millers; Alexander Woods, Holly Carburetors; W. R. Cummings, Manager; Robert Millar, Coach and Trainer; Jock Coll, Masseur

July 13	United States	3	Belgium	0	Montevideo
July 17	United States	3	Paraguay	0	Montevideo
July 26	United States	1	Argentine	6	Montevideo

International

Aug.	United States	3	Brazillian All-Stars	4	Rio de Janeiro

Exhibition

United States	1	National F.C.	2	Uruguay
United States	1	Penarol F.C.	4	Uruguay
United States	4	Santos F.C.	3	Brazil
United States	3	Sao Paolo F.C.	5	Brazil
United States	1	Botafogo	2	Brazil

1934 CHAMPIONSHIP

Sailed from New York, May 5: Thomas Amrheim, Baltimore, Md.; Edward Czerkiewicz, Pawtucket, R. I.; Walter Dick, Pawtucket, R. I.; Aldo Donelli, Pittsburgh, Pa.; William Fiedler, Philadelphia, Pa.; Thomas Florie, Pawtucket, R. I.; James Gallagher, Cleveland, Ohio; William Gonsalves, St. Louis, Mo.; Albert Harker, Philadelphia, Pa.; Julius Hjulian, Chicago, Ill.; William Lehman, St. Louis, Mo.; Thomas Lynch, New York City, N.Y.; Joseph Martinelli, Pawtucket, R. I.; William McLean, St. Louis, Mo.; George Moorehouse, Brooklyn, N.Y.; Werner Nilsen, St. Louis, Mo.; Peter Pietras, Philadelphia, Pa.; Herman Rapp, Philadelphia, Pa.; Francis Ryan, Philadelphia; Elmer Schroeder, Philadelphia, Pa., Manager; David L. Gould, Coach; Raymond Gadsby, Masseur.

May 24	United States	4	Mexico	2	Rome
May 27	United States	1	Italy	7	Rome

Exhibitions

United States	1	Wurtemberg	0	Stuttgart
United States	2	Ulm	2	Stuttgart
United States	2	Lower Saxony	2	Bremen
United States	2	Lower Saxony	2	Hanover

Against Mexico: Hjulian Czerkiewicz, Moorhouse, Lehman, Gonsalves, Pietras, Gallagher, Nilsen, Florie, Donelli, McLean. Goals, Florie 3, Nilsen.

Against Italy: Hjulian, Czerkiewicz, Moorhouse, Pietras, Gonsalves, Florie, Ryan, Nilsen, Donelli, Dick, McLean. Goals, Donelli.

1938 CHAMPIONSHIP AT PARIS

No United States participation.

1916 — ALL-AMERICAN TOUR OF SWEDEN AND NORWAY

Played 6, Won 3, Lost 1, Tied 2. Goals 9 against 9. Scorers, Ellis 3, Ford 2, Heminsley 1, Cooper 1, Spalding 1, Swords 1, Sailed from Hoboken July 26. Returned to Hoboken Sept. 19.

Society for American Soccer History

Alber Blakey, Philadelphia, Pa.; Walter Burgin, Philadelphia, Pa.; Neil Clarke, Bethlehem, Pa.; Harry Cooper, Newark, N.J.; Matthew Diederichsen, St. Louis, Mo.; Charles Ellis, Brooklyn, N.Y.; James Ford, Kearny, N.J.; John Heminsley, Newark, N.J.; Thomas Murray, Philadelphia, Pa.; James Robertson, New York City, N.Y.; Clarence Smith, Bayonne, N.J.; C. H. Spalding, Philadelphia, Pa.; Thomas Swords, Fall River, Mass.; George Tintle, Harrison, N.J.; Tom Cahill, Secretary U.S.S.F.A.; Manager; Harry Davenport, Newark, N.J., Trainer.

International

Aug. 22	United States	3	Swedish Federation	2 Stockholm
Sept. 3		1	Norway	1 Oslo

Exhibition

Aug. 15	United States	1	Stockholm Tigarna	1 Stockholm
24		0	A.I.K. Djurgardens	3 Stockholm
27		2	Orgryte	1 Gothenburg
Sept. 4		2	A.I.K. Djurgardens	1 Stockholm

Against Sweden. Tintle; Robertson, Spalding; Murray, Slarke, Smith; Ford, Ellis, Heminsley, Swords, Cooper. Goals, Cooper, Ellis, Spalding.

Against Norway. Tintle; Robertson, Spalding; Murray, Clarke, Smith; Ford, Heminsley, Ellis, Diederichsen, Swords. Goals, Ellis.

1925-26 — INTER-SECTIONAL INTERNATIONALS WITH CANADA

1925	June 27	United States	0	Canada	1 Montreal, Que.
	Nov. 8		6		1 Brooklyn, N. Y.
1926	Nov. 6	United States	6		2 Brooklyn, N. Y.

At Alexandra Park, Montreal. J. Douglas, Newark; C. Davis, Philadelphia; J. Ferguson, Bethlehem; T. Stark, New York; T. McFarlane, New York; H. Meyerdierks, New York; D. Brown, New York; B. Battles, Boston; A. Stark, Bethlehem; R. Millar, New York; T. Florie, Providence; Reserve, P. Andrews, Philadelphia; Goals, Canada, McLaine; Manager, Nathan Agar; Trainer, John Coll.

Ebbets Field 1925. T. Steel, Boston; D. Robertson, Brooklyn; W. Wilson, New Bedford; J. Kelly, Newark; W. Carnihan, Bethlehem; W. Herd, Brooklyn; D. Brown, New York; J. McGuire, New Bedford; A. Stark, Bethlehem; R. Millar, New York; M. Goldie, Bethlehem; Reserve, C. Davis, Philadelphia; Goals,U.S., Stark 4, Brown 2. Canada Burness. Manager, Nathan Agar; Trainer, John Coll; Referee, T. Cunningham, Linesmen, Halliday, Fraser.

Ebbets Field 1926. F. Kerr, Fall River; J. Marshall, Brooklyn; W. Wilson, New Bedford; W. Morris, Brooklyn; W. Carnihan, Bethlehem; G. Moorhouse, New York; G. Burness, Brooklyn; E. Smith, Providence, D. Brown, New York; A. Auld, Providence; T. Florie, Providence; Goals, Brown 2, Auld 2, Florie, Marshall, Canada, Faulkner, Graham; Referee, Creighton, Linesmen, W. Hollywood, T. Cunningham.

1937 — TRENTON HIGHLANDERS AT PAN AMERICAN TOURNAMENT AT DALLAS, TEXAS

The Trenton (N.J.) Highlanders, as National Amateur champions, rep-

Society for American Soccer History

resented the United States and the Winnipeg Irish represented Canada in the tournament.

Left Trenton July 11. Returned to Trenton July 21.

Jimmy Carlton, Bob Chambers, A. Chimieleski, J. Chimieleski, Al. Cooper, Andy Ferko, Bill Joseph, Steve Larkin, Jake Lawrence, Jackie Lloyd, Val Missialoski, Johnny Murphy, Alf. Rothstein, Joe Sokotoeski, Al. Wilson, Bob Yarson, Bill Lloyd, manager; Johnny Bugdal, secretary.

July 15	United States	1	Argentine	9 Cotton Bowl, Texas
16		2	Canada	3 Cotton Bowl, Texas
18	Argentine	8	Canada	1 Cotton Bowl, Texas

Against Argentine. Cooper; Chambers, Lloyd; A. Chimieleski, Joseph, Rothstein; J. Chimieleski, Wilson, Yarson, Ferko, Missialoski. Goals, United States, Carlton. Subs, Carlton for Yarson.

Against Canada. Cooper; Chambers, Lloyd; Joseph, A. Chimieleski, Rothstein; J. Chimieleski, Wilson, Yarson, Ferko, Missialoski. Goals, United States, Yarson, Ferko.

1937 — UNITED STATES - MEXICO INTERNATIONAL SERIES

Played 3, Lost 3. Goals 6 against 18. Scorers, McEwan 2, Nemchik 2, Rae 2. Sailed from New York Aug. 26.

John Currie, Kearny Celtic F.C.; John Dubienny, Cambridge, Mass.; Thompson Ferguson, Chevrolet Detroit F.C.; Frank Greinert, Brooklyn S.C.; Raymond Hamilton, New England; Joseph Martinelli, Pawtucket, R.I.; Sam McAlees, Reading, Pa.; John McEwan, St. Mary's Celtic F.C.; Joseph Michaels, Pawtucket, R.I.; George Nemchik, Philadelphia, Pa.; Alexander Rae, Kearny Americans F.C.; Joseph Roe, St. Louis Shamrocks, Mo.; Angel Rodrigues, Brooklyn Hispano F.C.; Edward Ruddy, Brooklyn Hispano F.C.; Ray Voltz, Passon F.C. Pa.; Elmer A. Schroeder, Philadelphia, Pa., Manager; John Coll, Brooklyn, N.Y., Trainer; Francis Bartkus, Brooklyn, S.C. was selected but was unable to make the trip.

Sept. 12	United States	2	Mexico	6	Mexico City
19		2		7	Mexico City
26		1		5	Mexico City

Exhibition

Sept. 28	United States	4	Physical Med School	1	Mexico City

1947 — NORTH AMERICAN CONFEDERATION CHAMPIONSHIP

Ponta Delgada F.C. of Fall River, Mass., United States Open and Amateur champion was named to represent the United States.

Played 3, Lost 3. Goals 2 against 10.

Jesse Braga, Jim Delgado, Joe Ferreira, Vincent Lucianno, John Machado, Joseph Machado, Manuel Martin, Joseph Michaels, Frank Moniz, Joseph Rego, Walter Romanowicz, Ed Sousa, John Sousa, John Travis, Ed Valentine. Manuel Travis, manager; Joseph Barboza, trainer; Andrew M. Brown, former president U.S.S.F.A.; Walter Giesler, vice president U.S.S.F.A.; Referee Sam Galin, who was to referee the game between Mexico and Cuba and linesman in the United States games against Mexico and Cuba.

Society for American Soccer History

July	13	United States	0	Mexico	5	Havana, Cuba
	17	Mexico	3	Cuba	1	Havana, Cuba
	20	United States	2	Cuba	5	Havana, Cuba

Against Mexico and Cuba. Romanowicz, John Machado, Martin, Rego, Ferreira, Braga, Moniz, Ed Sousa, Valentine, John Sousa, John Travis. Goals against Cuba, John Sousa, Valentine.

JOSEPH TRINER INTERNATIONAL CUP

Soccer's newest trophy was donated by Joseph Triner, past president of the U.S.S.F.A. and present Illinois Soccer Commission chairman, at the 1947 convention. The intent was to match the champions of the United States against the Canadian champions for the North American crown.

Rules of the competition provides that the country winning the trophy three years in succession will become the permanent custodian. The donor will then offer another trophy for competition. The inscription on this magnificent piece of sliverware reads "Joe Triner International Soccer Cup. United States vs. Canada. Allies in War and Sport Competitors in Peace. May the Better Team Win".

1949 — EASTERN U.S. VS. CANADA

Nov.	24	U.S.	2	Canada	2	New York City
		Kropfelder 2		McMahon, Menyes		

U.S. — Bahr, Bianconi, Devlin, Gormley, Hynes, Kropfelder, Maca, McCann, B. McLaughlin, McPhail, O'Connell, A. Sheppell, W. Sheppell, Watman.

CANADA — Campbell, Carmichael, Chambers, Caplan, Cunningham, Grosser, Johnstone, Mack, MacKay, J. McLaughlin, McMahon, Menyes, Syme, Wallace, Referee, Jas MacLean. Linesmen, Capozzi, Rinz.

1948 — CHICAGO VS. MONTREAL

Aug.	15	Chicago All Stars (Gardic, Heron, Matevich)	3	Montreal (Cambers, McMahon, Menyes)	3	Montreal
Sept.	12	Chicago All-Stars (Gardic 2, Heron)	3	Montreal (Chambers)	1	Chicago

Chicago All-Stars represented the United States and Cancar S.F.C. (Canadian Car & Foundry Co. of Montreal) Canadian National Open champion represented the Dominion of Canada.

CHICAGO. Pete Black, Norman Blaeske, Jerry Bohm, Alex Gardic, Gil Heron, Eric Klaber, Johnny Matthews, Udino Marchiori, Pete Matevich, Rafael Mejia, Dave Rarity, Jerry Razek, Tommy Riley, Walter Schroeder, Steve Wisnewski, Manager John Sadecky.

MONTREAL. A. Anderson, M. Castonguay, B. Chambers, J. Fleming, B. Gammon, B. Grundie, T. Harris, D. McMahon, D. McLean, A. Menyes, J. Sinclair, D. Smith, T. Turley,, D. Walker, C. Warner. Manager, E. MacLaine.

1947 — ST. LOUIS VS. TORONTO-MONTREAL

Oct.	18.	St. Louis All-Stars (Beckman 2, Wecke)	3	Toronto-Montreal (Phillips, Cairns, Medley)	3	Toronto
Nov.	9.	St. Louis All-Stars (Pariani, McLean, own goal)	2	Toronto-Montreal (Huggins, McLean, Wyler)	3	St. Louis

Society for American Soccer History

ST. LOUIS. Annis, Beckman, Bertani, Columbo, Corona, Dueker, Duffy, Finn, Fitzgerald, Lawton, Meehan, Merlo, Osterhold, Pariani, Wallace, Wecke.

TORONTO-MONTREAL. Cairns, Caplan, Davidson, Drummond, Gammon, Gill, Godley,, Greenhalgh, Huggins, Kennedy, McArthur, McLean, McMahon Medley, Phillips, Ralbowsky, Varley, Wyler.

U.S. EXHIBITION TOURS ABROAD

U.S. EXHIBITION TOURS ABROAD TO SEPTEMBER 1st, 1950

Played 175, Won 67, Lost 64, Tied44, Goals 396 against 435

	Year	P	W	L	T	F	A	%
Worcester, Mass., to England.....	1929	5	3	0	2	19	13	.800
Gjoa S.C. to Norway	1931	29	16	5	8	75	46	.689
St. Louis to Sweden	1920	14	7	2	5	35	24	.678
N.Y. Nationals to Cuba	1929	3	1	0	2	6	5	.666
Bethlehem Steel to Sweden, Norway	1919	14	6	2	6	22	15	.642
Vikings S.C. to Sweden, Norway...	1927	33	18	9	6	91	74	.636
Milwaukee Germania to Germany...	1930	7	4	3	0	17	16	.571
N.Y. Americans to Mexico.....	1935	6	3	3	0	18	12	.500
Fall River F. C. to Central Europe	1930	6	2	3	1	12	20	.406
Hakoah F. C. to South America....	1930	15	2	5	8	14	25	.400
N.Y. Americans to Cuba, Mexico....	1934	8	3	5	0	12	14	.375
N.Y. Americans to Cuba.....	1949	3	0	1	2	5	6	.333
Hakoah F. C. to Cuba, Costa Rica..	1931	6	1	3	2	9	14	.333
National League (N.Y.) to Haiti....	1941	5	1	3	1	10	18	.300
G.-A. League (N.Y.) to Germany....	1950	8	0	7	1	9	36	.062
Penn State College to Scotland.....	1934	8	0	8	0	29	64	.000
Worcester, Mass., to England.....	1926	5	0	5	0	13	33	.000

1919 — BETHLEHEM STEEL F.C. IN SWEDEN AND DENMARK

Played 14, Won 6, Lost 2, Tied 6. Goals 22 against 15. Scorers, Heminsley 8, Forrest 5, Fleming 3, Brown 2, Stark 2, McKelvey 1, Ratican 1.

Sailed from New York July 23.

A. Blakey, D. Brown, J. Campbell, W. Duncan, J. Ferguson, T. Fleming, S. Fletcher, W. Forrest, J. Heminsley, G. McKelvey, T. Murray, F. Pepper, H. Ratican, J. Robertson, A. Stark, G. Tintle, J. Wilson, Tom Cahill, manager; W. Sheridan, trainer; S. A. Stearn, masseur; E. J. Viberg, interpreter.

Aug. 10	Bethlehem Steel		2	A.I.K.	2	Stockholm
13	"	"	1	Tigrarna	1	"
17	"	"	2	Swedish Provinces	1	"
19	"	"	1	Djurgardens	1	"
24	"	"	1	Norrkoping	1	Norrkoping
26	"	"	4	All Skane	0	Helsingborg
29	"	"	1	K.B. & B (93)	1	Copenhagen

Society for American Soccer History

Sept.	4	"	"	2	Malmo & Landsrokna	3 Malmo
	7	"	"	1	Goteborg Kamraterna	3 Gothenburg
	10	"	"	1	Goteborg Orgryte	0 "
	14	"	"	2	Norrkoping	0 Norrkoping
	18	"	"	1	All Stockholm	0 Stockholm
	21	"	"	3	Swedish Select	2 "
	24	"	"	0	Hammarby	0 "

1920 — ST. LOUIS CLUB TO SWEDEN

Played 14, Won 7, Lost 2, Tied 5. Goals 35 against 24. Scorers, Marre 9, Brown 8 McHenry 6, Corrigan 3, Ratican 2, Reilly 2, Bechtold 2, Schemel 2, Ellis 1.

Sailed from Montreal July 11. Arrived New York Sept. 26.

A. Bechtold, A. Brady, G. Corrigan, O. Fink, H. Marre, A. McHenry, T. O'Hanlon, W. Quinn, L. Reilly, A. Ryan, G. Schemel, F. Vaughan, all of St. Louis, Mo.; A. Blakey, Philadelphia, Pa.; D. Brown, C. Ellis, G. Post, Kearny, N. J.; H. Ratican, Brooklyn, N.Y.; G. Tintle, Harrison, N.J.; Physical Director Mayers, St. Louis, Mo.; Jean Roberts, Detroit, Mich., trainer; Tom Cahill, secy U.S.S.F.A. manager.

Aug.	1	St. Louis	"	5	Swedish Selected	2 Stockholm
	5	"	"	3	Djurgardens	1 "
	8	"	"	1	Swedish Olympic Prospects	1 "
	12	"	"	2	A.I.K.	2 "
	16	"	"	2	Swedish Olympic	5 "
	18	"	"	2	All Stockholm	2 "
	23	"	"	4	Northern Sweden	1 "
	25	"	"	1	All Stockholm	3 "
	29	"	"	2	A.I.K.	0 "
Sept.	1	"	"	3	Sleipner	1 Norrkoping
	5	"	"	3	All-Skane	1 Helsingborg
	8	"	"	2	All-Wastergotland	0 Boras
	12	"	"	3	G,A.I.	3 Gothenburg
	15	"	"	2	All-Gothenburg	2 "

1927 — VIKING A.C. (N.Y.) TO SWEDEN AND NORWAY

Played 33, Won 18, Lost 9, Tied 6. Goals 91 against 74. Sailed from New York June 24.

Bror Anderson, Herbert (Murren) Carlson, capt.; Axel Corall, Knut Dahlgren, Edwin Gobel, Sven Hagman, B. Hoilund, Oscar Johanson, Eric Levin, Thure Lundberg, Harry Magnuson, Werner Nielsen, Axel Schylander, Alex Simonson, Gosta Sjodin, Torsten Svenson, Pyret Westring, Gosta Wihlborg. Gerhard T. Rooth, player-manager, Vilgot Peterson, assistant manager.

July	13	Viking	2	Goteborg	3
	15		2	Goteborg	2
	17		1	Stockholm	3
	20		4	Stockholm	5
	22		1	Eskilstuna	4
	24		1	Linkoping	4
	26		2	Norrkoping	1

Society for American Soccer History

	27	3	Ljungsbro	1
	28	3	Husqvarna	2
	29	4	Boras	3
	30	4	Vaxio	1
	31	6	Vastervik	4
Aug	2	3	Varberg	1
	3	2	Halmstad	2
	5	5	Trollhattan	1
	7	4	Uddevalla	2
	9	5	Lidkoping	0
	10	3	Karlskega	1
	12	2	Orebro	0
	13	2	Surahammar	6
	16	2	Vasteras	4
	17	1	Borlange	1
	19	1	Cevle (Bryn)	1
	21	3	Hudiksvall	0
	23	0	Sandviken	2
	24	2	Upsala	7
	25	4	Sundsvall	1
	26	2	Matfors	2
	27	2	Kramfors	0
	30	4	Oslo	2
	31	3	Oslo	2
Sept	2	3	Oslo	3
	3	5	Oslo	3

1929 — NEW YORK NATIONALS TO CUBA

Played 3, Won 1, Tied 2. Goals 6 against 5. Scorers, Nelson 4, Carlson 1, McGhee 1.

Carlson, Chatton, Donald, Gallagher, Martyne, McGhee, McMillan, Nelson, Ozores, Renzulli, Slaven, Strauss, Sousa, Warden. E. Viberg, manager; C. Jacobson, trainer.

Dec. 25	Nationals	1	Iberia	1	Havana, Cuba
29		2	Juventud Asturiana	1	Havana, Cuba
Jan. 1		3	Centro Gallego	3	Havana, Cuba

1930 — FALL RIVER F.C. TO CZECHOSLOVAKIA, AUSTRIA, JUGO-SLAVIA & HUNGARY

Played 6, Won 2, Lost 3, Tied 1. Goals 12 against 20.

Walt Aspden, Jerry Best, Hughie Coyle, Bill Haper, Jock MacArthur, Charlie McGill, Frank McKenna, Alec McNab, Bill McPherson, Jim Montgomery, Scotty Nielson, Archie Stark, Tec White. Fred Quinn and Shawkey Mark, managers.

Aug. 20	Fall River	2	Slavia	2	Prague
23		0	Weiner F.C.	6	Vienne
24		3	Austria	1	Vienna
28		2	Slavia F.C.	4	Prague
30		3	Bratislavia F.C.	1	Belgrade
31		2	Budapest	6	Budapest

Society for American Soccer History

1930 — GERMANIA MILWAUKEE TO GERMANY

Played 7, Won 4, Lost 3. Goals 17 against 16. Sailed S.S. St. Louis May 14.

Richard Buschner, G.S.C. Milwaukee; Julius Essenwein, Grand Rapids, Mich.; Richard Falk, New York S.C.; Bernhard Gruenfeld, New York Giants F.C.; Joseph Halstenbach, New York S.C.; Willie Herkert, German-Hungarian F.C., Brooklyn, N.Y.; Henry Kaercher, Grand Rapids, Mich.; Woodie Koerner, New York S.C.; Frank Konzela, G.S.C. Milwaukee; Rudy Kuntner, New York Vienna F.C.; George Mueller, G.F.C. Newark, N.J.; Thomas Pfitzer, Chicago Vienna F.C.; Otto Schneider, Newark Americans F.C.; Teddy Steinbrenner, G.F.C. Newark, N.J.; Willie Sumser, New York S.C.; Joseph Wegner, Chicago Maccabi F.C.; Frank Taddock, Milwaukee, trainer; Reinhold Eberhardt, G.A.L. Representative.

May 28	Germania Milwaukee	1	H.S.V. Hamburg	2
June 1		2	H.S.V. Hanover	1
10		3	Minerva Berlin	1
15		3	V.F.L. Halle	1
19		1	1860 Munich	4
20		0	Eintracht Frankfort	4
28		7	K.F.V. Karlsruhe	3

1930 — HAKOAH ALL-STARS TO BRAZIL, ARGENTINE & URUGUAY

Played 15, Won 2, Lost 5, Tied 8. Goals 14 against 25.

June 19	Hakoah	1	Sao Paolo	3 Brazil
22		0	Brazilian Stars	2 Brazil
28		1	Vasco de Gama	0 Brazil
29		0	Brazilian Stars	0 Brazil
July 5		3	Soa Paolo	2 Brazil
6		1	Corinthians	5 Brazil
12		2	Santos	2 Brazil
13		1	Argentine Stars	3 Argentine
14		1	Rosario Central	1 Argentine
20		1	Newell Old Boys	1 Argentine
21		1	Rossario Stars	1 Argentine
27		1	Belgrono	1 Argentine
28		1	La Plata	3 Argentine
Aug. 10		0	Independencia	0 Argentine
20		0	Penarol	0 Uruguay

1931 — HAKOAH ALL-STARS TO CUBA AND COSTA RICA

Played 6, Won 1, Lost 3, Tied 2. Goals 9 against 14.

July 19	Hakoah	2	Iberia F.C.	0 Havana
26		1	Juventud Asturiana	5 Havana
Aug 2		2	Centro Gallego	2 Havana
9		1	Orion	1 San Jose
16		1	Herediano	2 San Jose
23		2	Alajulense	4 San Jose

Society for American Soccer History

1931 — GJOA S.C. OF BROOKLYN, N. Y. TO NORWAY

Played 29, Won 16, Lost 5, Tied 8. Goals 75 against 46. Sailed from Brooklyn April 16.

Nils Andersen, Fin Carlsted, Einar Edwards, Gunnar Endresen, Wm. Enger, Ivor Foss, Ove Gundersen, George Hansen, Hans Hansen, Henry Jendal, Oscar Larsen, Werner Nilsen, Wollert Nilsen, Martin Olsen, Hans Pedersen, Carl Refsland, Eide Refsland, Gustave Sommerstad, Harry Hansen, manager; Sig Gjertsen, business manager.

May	3	Gjoa S.C.	2 Lyn F. C.	2 Oslo
	5		3 Drammens	0 Drammen
	7		2 Tell F. C.	2 Notodden
	10		0 Tonsberg Turn	3 Tonsberg
	12		3 Falk F. C.	1 Horten
	14		3 Mjondalen F. C.	2 Mjondalen
May	17		0 Fredrikstad F. C.	3 Fredrikstad
	20		5 Sarpsborg F. C.	1 Sarpsborg
	22		5 Moss F. C.	1 Moss
	24		3 Storm F. C.	1 Skien
	29		4 Uredd F. C.	1 Porsgrund
	31		1 Larvick Turn	2 Larvick
June	1		8 Granne F. C.	1 Arendal
	2		2 Start F. C.	0 Kristiansand
	3		3 Flekkefjord	1 Flekkefjord
	5		4 Ulf F. C.	1 Sandnes
	7		3 Sif F. C.	2 Stavanger
	9		1 Sif F. C.	1 Stavanger
	12		2 Vard F. C.	1 Haugesund
	14		4 Djerv F. C.	1 Bergen
	16		2 Brann F. C.	2 Bergen
	18		0 Aalesund	4 Aalesund
	19		1 Kristiansund	1 Kristiansund
	21		4 Brage F. C.	6 Trondheim
	22		2 Orkanger	0 Orkanger
	24		4 Hamar F. C.	2 Hamar
	25		0 Gjovik	0 Gjovik
	26		2 Lillehamar	2 Lillehamar
	28		2 Skeid F. C.	2 Oslo

1934 — PENN STATE COLLEGE TO SCOTLAND

Played 8, Lost 8. Goals 29 against 64. Left New York Aug. 11. Arrived New York Sept. 20.

Marple Ambler, Allentown, Pa.; Joe Bielicki, Hellertown, Pa.; John Binns, Philadelphia, Pa.; Joe Brady, Cleveland, Ohio; Woodrow Corman, Zion, Pa.; Bob Dallas, North Wales, Pa.; Eddie Finzel, Frostburg, Pa.; Jack Fletcher, State College, Pa., Capt.; Eddie Long, Pittsburgh, Pa.; Don Masters, Philadelphia, Pa.; Bill McEwan, South Hadley, Mass.; John McEwan, South Hadley, Mass.; Ben Palmer, Swarthmore, Pa.; Dick Siegel, Narberth, Pa.; Bill Nicolson, Wilkes-Barre, Pa., Student Manager; Bill Jeffrey, Coach.

Society for American Soccer History

Aug.	23	Penn State	4	Leith Amateurs	6 Tynecastle
	25		2	Gala Fairydean	7 Galashields
	29		6	Inverness Caledonians	10 Inverness
	30		4	Thurso F.C.	12 Thurso
Sept.	1		4	Elgin City	5 Elgin
	5		1	Falkirk Amateurs	10 Falkirk
	8		2	Greenoch Former H.S. Pupils	5 Greenoch
	10		6	Kilmarnock Academicals	9 Kilmarnock

1934 — NEW YORK AMERICANS TO CUBA AND MEXICO

Played 8, Won 3, Lost 5. Goals 12 against 14.

Harry Collins, Joe Clark, Joe Edessa, Robert Fleming, Louis Gross, James Mazza, Robert McKay, William Morton, Eddie Parodi, William Rahmer, Erno Schwarcz, manager; Phil Slone, Ed Trabanco.

June	24	New York Americans	0	Centro Gallego	2 Havana
July	1		2	Juv Asturiana	3 Havana
July	8		1	Iberia	2 Havana
	22		3	Espana	1 Mexico City
	29		1	Amerika	2 Mexico City
Aug.	5		2	Atlante	1 Mexico City
	12		2	Necaxa	0 Mexico City
	19		1	Atlante	3 Mexico City

1935 — NEW YORK AMERICANS TO MEXICO

Played 6, Won 3, Lost 3. Goals 18 against 12.

Tom Amrhiem, Harry Carroll, Stanley Chesney, Harry Collins, Ed Czerkiewicz, Walter Dick, Aldo Donelli, Bill Gonsalves, Tom Lynch, Joe Martinelli, Ed Parodi, William Schwanke, Erno Schwarcz, manager; Al Tuvim, president.

June	16	New York Americans	2	Amerika	3 Mexico City
	23		9	Espana	1 Mexico City
	30		3	Atlante	2 Mexico City
July	7		3	Asturias	1 Mexico City
	14		1	Necaxa	2 Mexico City
	21		0	Espana	3 Mexico City

1941 — NATIONAL LEAGUE (N.Y.) TEAM TO HAITI

Played 5, Won 1, Lost 3, Tied 1. Goals 10 against 18. Scorers, McKnight 5, Hynes 2, Skogstrom 1, Ballantyne 1, Gonsalves 1.

Sol Albert, Hatikvoh F.C.; Archie Ballantyne, Galicia F.C.; Bill Gonsalves, Healy F.C.; Charles Hlavsa, Prague F.C.; Cecil Holland, Bigelow Sanford F.C.; Jacky Hynes, Swedish F.C.; Edward McKnight, Bigelow Sanford F.C.; Richard Miller, Hatikvoh F.C.; John Nagy, Healy F.C.; J. E. Refsland, Gjoa F.C.; David Sattler, Hatikvoh F.C.; Egil Skogstrom, Norwegian-American F.C.; Joe Zakacz, Healy F.C.; Jack Flamhaft, manager; Paul Rudolfer, trainer.

April	10	National League	1	Port-au-Prince	4	Jeudi
	13		3	Haiti National	5	Dimanche
	15		0	Violette F.C.	4	Mardi
	18		3	Haiti National	3	Vendredi
	20		3	Haiti National	2	Dimanche

Society for American Soccer History

1949 — NEW YORK AMERICANS TO CUBA

Left Newark Airport Jan. 8. Returned to Newark Airport Jan. 18.

Played 3, Tied 2, Lost 1. Goals 5 against 6.

Ed Borkowski, Joe Boyle, Caesar DeRostaing, Sol Eisner, Erwin Fister-Jacky Hynes, Hugh Keagins, Jake Lorenz, Joe Novas, John O'Connell, Frank Ossowski, Dick Roberts, Bob Yingling. Erno Schwarcz, Manager; Tom Kelly, assistant manager; Jimmy Aitken, trainer and Referee Jose [illegible]ppez who officiated in the game against Juventus Asturiana.

Jan. 9	New York Americans (O'Connell, Hynes, Roberts)	3	Iberia	3	Havana
Jan. 12	(Roberts)	1	Juventud Asturiana	1	Havana
Jan. 16	(Eisner)	1	Puentes Grandes	2	Havana

WORCESTER, MASS. — WORCESTERSHIRE, ENGLAND EXCHANGE

Sponsored by the Sportsmanship Brotherhood

MASS. TEAM TO ENGLAND

1926

Played 5, lost 5. Goals 13 against 33.

Oct. 13	Worcester	2	Stourbridge	5	Stourbridge
15		2	Eversham	4	Eversham
20		3	Worcestershire	2	Worcester
22		1	Kidderminister	5	Kidderminister
25		5	Oxford Cent'rs	6	London

1929

Played 5, Won 3, Tied 2. Goals 19 against 13.

Sept. 7	Worcester	6	Worcestershire	6	Worcester
10		3	Dudley	2	Dudley
12		5	Stourbridge	4	Stourbridge
14		4	Evesham	0	Evesham
18		1	Kidderminister	1	Kidderminister

WORCESTERSHIRE TEAMS TO MASS.

1927

Played 5, Won 2, Tied 2, Lost 1. Goals 15 against 7.

Sept. 21	Worcestershire	2	Morgan	0	Hopedale
24		7	Draper	0	Worcester
27		0	All-Stars	1	Worcester
29		3	County Brotherhood	3	Worcester
Oct. 1		3	Whittal	3	Worcester

1930

Played 5, Won 3, Lost 1, Tied 1. Goals 18 agains 12.

Sept. 18	Worcestershire	2	Morgan	1	Worcester
20		2	Whittal	2	Worcester
24		9	Scandinavian Stars	4	Worcester
27		2	Whitinsville	3	Whitinsville
Oct. 1		3	Worcester Stars	2	Worcester

Society for American Soccer History

FOREIGN TEAMS VISITS TO U.S.

Till September 1st 1950

	Teams	P	W	L	T	F	A	%
Germany	1	6	6	0	0	44	6	1.000
Chile	1	9	8	1	0	38	19	.888
England	15	155	123	13	19	725	174	.864
Hungary	3	12	10	2	0	55	21	.8[illegible]
Scotland	8	55	42	6	7	214	67	.82[illegible]
Italy	2	16	12	4	0	61	35	.812
Turkey	1	7	5	1	1	27	7	.785
Uruguay	2	14	10	3	1	36	17	.750
Sweden	3	25	17	6	2	107	53	.720
Czechoslovakia	3	21	13	4	4	84	32	.714
Ireland	1	10	6	2	2	30	17	.700
Austria	2	25	12	5	8	61	40	.640
Cuba	3	16	9	5	2	36	25	.625
Mexico	5	33	16	8	9	115	74	.621
Spain	3	14	7	4	3	28	23	.607
Argentine	2	4	2	2	0	9	9	.500
Brazil	2	3	1	1	1	5	6	.500
Israeli	4	34	13	15	6	62	60	.470
TOTALS	61	459	312	83	65	1737	685	.750

PREVIOUS FOREIGN TEAM TOURS

ARGENTINE TEAMS

1930 — SPORTIVO F.C. OF BUENOS AIRES

Bottazzo: Cherro, Comaschi; Bartolucci, Albarracia, Chalu; Lauri, Arrillaga, Ambrosetti, Apolito, Cilento.

March 14 Sportivo 1 Hakoah All Stars 2 New York City, N. Y.

1931 — VALEZ SARSFIELD OF BUENOS AIRES

Played 3 Won 2, Lost 1. Goals 8 against 7.

Alvarca, Arianpe, Chividini, Clivedician, Dasoa, Devoto, Diaz, Ferreira, Forrester, Garbibi, Paternoster, Peruch, Quiroga, Saucia, Stanchez, Valante, Varallo.

Feb. 21	Velez Sarsfield	3	New York Stars	1	Brooklyn, N. Y.
22		2	Fall River F.C.	5	Fall River, Mass
23		3	Hakoah All-Stars	1	Brooklyn, N. Y.

AUSTRIAN TEAMS

1926 — HAKOAH ALL-STARS OF VIENNA

Played 12. Won 7, Lost 2, Tied 3. Goals 35 against 20. Arrived New York April 17. Sailed from New York June 2.

Leo Drucker, Josef Eissenhoffer, Alexander Fabian, Max Gold, Josef Gruenfeld, Max Gruenwarld, Albert Gutman, Aleis Hess, Moriz Haeusler, Alfred Krausz, Alexander Neufeld, Erwin Pollak, Max Scheur, Heinrich Schoenfeld, Erno Schwarcz, Jacob Wegner, Theodore Wegner, Siegfried

Society for American Soccer History

Wortmann, Dr. Valentine Rosenfeld, trainer and coach, Dr. Eugen Felix, Dr. Koerner, Siegfried Vogelfaenger.

April	*20	Hakoah	3	Brooklyn Wanderers	1	New York City, N.Y.
	21		0	Lavenders	0	New York City, N.Y.
	25		4	New York	0	New York City, N.Y.
May	1		0	New York Stars	3	New York City, N.Y.
	2		2	Providence	2	Providence, R.I.
	9		6	Sparta	1	Chicago, Ill.
	15		4	St. Louis Stars	2	St. Louis, Mo.
	16		2	Chicago Stars	3	Chicago, Ill.
	22		6	Brooklyn Wanderers	4	Brooklyn, N.Y.
	23		3	Newark	3	Newark, N. J.
	29		2	New York Giants	1	New York City, N.Y
	31		3	Philadelphia Field Club	0	Philadelphia, Pa.

*Training games.

1927 — HAKOAH ALL-STARS OF VIENNA

Played 13, Won 5, Lost 3, Tied 5. Goals 26 against 20. Arrived New York April 19. Sailed from New York July 9.

Barback, Beer, Fabian, Feldman, Fischer, Fried, Fuss, Gold, Gruenfeld, Hess, Katz, Kestler, Kovaczi, Mausner, Nicholsberger, Scheuer, Strohs, Weiss, Wortmann, Arthur Baar, trainer; Gustav Spiegler, director. Permission of the U.S.S.F.A. was granted to Moriz Haeusler, Albert Gutman, Max Gruenwald and Erno Schwarcz, who had remained in the United States after the 1926 tour of the Hakoah All-Stars, to rejoin the 1927 team for the duration of the tour. All four players were on the roster of the New York Giants.

April	20	Hakoah	0	Bethlehem	0	Bethlehem, Pa.
	23		1	Philadelphia Stars	2	Philadelphia, Pa.
May	1		2	New York Giants	2	New York City, N.Y.
	7		2	Peel Cup Stars	1	Chicago, Ill.
	8		2	Sparta	2	Chicago, Ill.
	15		1	Hungarians	1	Cleveland, Ohio
	22		2	Michigan Stars	0	Detroit, Mich.
	25		2	Toronto Stars	3	Toronto, Ont.
	28		2	Indiana Flooring	1	New York City, N.Y.
	30		7	Philadelphia Stars	1	Philadelphia, Pa.
June	4		4	Irish Stars	3	Brooklyn, N.Y.
	*8		0	Giants-Bethlehem	0	New York City, N.Y.
July	9		1	Brooklyn Wanderers	4	Brooklyn, N.Y.

*Night game.

BRAZILIAN TEAMS

1936 — BOTAFOGO F. C.

April	14	Botafogo	1	St. Louis Shamrocks	0	St. Louis, Mo.
	16		3	St. Louis Shamrocks	3	St. Louis, Mo.

1941 — BOTAFOGO F. C.

Balense, Mell, Cancado, Carvallo, DeFritas, Fonseca, Lemos, Moreira, Morals, Patesco, Procopio.

March	23	Botafogo	1	American League	3	New York City, N.Y.

Society for American Soccer History

CHILEAN TEAMS

1933 — AUDAX S. C.

Played 9, Won 8, Lost 1. Goals 38 against 19.

Arranedo, Aviles, Azerman, Bologna, Carrollo, Fischer, Gornell, Guibice, Ojeda, Orrego, Riveras, Sorrelli.

Sept. 16	Audax	5	Wisconsin	2	Milwaukee, Wis.
22		2	Sparta Leader	0	Chicago, Ill.
23		2	National League Stars	0	Chicago, Ill.
30		6	Stix, Baer & Fuller	4	St. Louis, Mo.
Oct. 9		2	Stix, Baer & Fuller	3	St. Louis, Mo.
10		4	Slavia	2	Cleveland, Ohio
14		5	Michigan Stars	3	Detroit, Mich.
21		8	Philadelphia Americans	3	Philadelphia, Pa.
22		4	Brooklyn Celtic	2	Brooklyn, N.Y.

CUBAN TEAMS

1941 — PUENTES GRANDES F. C.

Played 6, Won 2, Lost 3, Tied 1. Goals 17 against 15.

Blanco, Diaz, Fernandez, Fonseca, Gascon, Gil, Mammanna, Menendez, J. Minsal, L. Minsal, M. Minsal, Morales, Ovide, Quiriello, Tunas, Vinyets.

Sept. 1	Puentes Grandes	2	New York Americans	3	New York City
3		2	Philadelphia Nationals	2	Phila., Pa.
5		5	Baltimore Americans	1	Baltimore, Md.
7		3	Hispano-St. Mary's Celtic	4	New York City
14		1	Brookhattan	3	New York City
15		4	Philadelphia Americans	2	Phila., Pa.

1946 — PUENTES GRANDES F. C.

Played 5, Won 3, Lost 1, Tied 1. Goals 7 against 5.

Alvarez, Barquin, Brioso, Garcia, Gonzalez, Lierand, J. Minsal, M. Minsal, Oliveria, Ovide, Veiga, Vinyets.

Sept. 8	Puentes Grandes	2	New Jersey A.S.L. Stars	1	Kearny, N.J.
13		1	Pittsburgh Stars	1	Pittsburgh, Pa.
15		1	Brookhattan-Hispano	2	New York City
17		2	New England Stars	1	Fall River, Mass
22		1	Philadelphia Stars	0	Phila., Pa.

CZECHOSLOVAKIAN TEAMS

1926 — SPARTA F.C. OF PRAGUE

Played 12, Won 7, Lost 2, Tied 3. Goals 44 against 20.

Arrived New York Aug. 30. Sailed from New York Nov. 4.

Carvan, Cerveny, Dolejsi, Fleishman, Hajmy, Hochmann, Hojer, Horejs, Janda, Kaliba, Kolenaty, Miclik, Perner, Pesek-Kada, Polacek, Steiner, Col J. Maly, president; J. Spindler trainer; J. Fanta, president Czechoslovakia Association, Dr. F. Schneinost, international secretary Czechoslovakian Association.

Sept. 6	Sparta	4	International League	0	Brooklyn, N.Y.
11		3	Brooklyn Wanderers	3	Brooklyn, N.Y.

Society for American Soccer History

Sept.	12	6	New York Giants	0	New York City, N.Y.
	19	2	Fall River F. C.	3	Fall River, Mass.
	26	6	Ohio Stars	2	Cleveland, Ohio
Oct.	4	1	Chicago Stars	0	Chicago, Ill.
	10	4	Ulster United	4	Toronto, Ont.
	17	5	St. Louis Stars	3	St. Louis, Mo.
	23	9	Sparta F.C.	0	Chicago, Ill.
	24	2	Detroit Stars	1	Detroit, Mich.
	30	1	Brooklyn Wanderers	3	Brooklyn, N.Y.
Nov.	3	1	Galicia F.C.	1	Newark, N. J.

1934 — S. K. KLADNO

Played 8, Won 5, Lost 2, Tied 1. Goals 34 against 11.

Arrived Aug. 28.

Behoundek, Cerny, Fisher, Junek, Klaz, Krauss, Moly, Nejedly, Novy, Prophazka Stejskal, Svec, Tichy, Tronick.

Sept.	3 Kladno	9	Sparta-Leader	0	Chicago, Ill.
	5	9	St. Louis Stars	1	St. Louis, Mo.
	9	4	Illinois Stars	0	Chicago, Ill.
	15	2	Phila., German-American	1	Philadelphia, Pa.
	16	2	Metropolitan Stars	3	New York City, N.Y.
	19	0	American League Stars	2	East Newark, N.J.
	22	4	Slavia F.C.	0	Cleveland, Ohio
	23	4	Wonderbolts	4	Chicago, Ill.

1948 — BRATISLAVA F.C.

Reiman; Venglar, Ruzovic; Vican, Pokorny; Danka, Malatinsky, Simansky, Schubert, Preis.

September 1	Bratislava	6	Chicago Stars	1	Chicago, Ill.

ENGLISH TEAMS

1905 — THE PILGRIMS

Because of public outcry against the brutality of American College football and President Theodore Roosevelt's invitation to the leading football experts to visit Washington for discussions for the modification of the game, the Pilgrims, selected from the leading English amateur clubs, were invited to make a tour of the United States and Canada. The prime object of the tour, which was he first by a British team and highly successful, was to popularise the sport with the colleges.

The team which included several international players was, J. D. Barnesdale, J. Bryning, C. Copeland, F. Fletcher, Sir Charles Kirkpatrick, F.S. Malmsley, W. H. McNuttal, Fred Milne, capt.; A. R. Milton, J. E. Raine, E. W. Story, Vivian Woodward, F. O. Wright.

The invaders played 23 games of which 21 were won and two lost and games were staged in Montreal, Quebec, Niagara Falls, Toronto, Hamilton, Berlin, Rosedale, Detroit, Chicago, St. Louis, Philadelphia, New York, Fall River and Boston.

Many college players were used in the American lineups but the only

Society for American Soccer History

complete team of collegiates, the University of Pennsylvania, was fielded in Philadelphia.

Before sailing for England on Oct. 26, Fred Milne and Vivian Woodward, one of the greatest center forwards to play in England, were invited to the White House by President Roosevelt for a discussion of the sport.

1909 — THE PILGRIMS

Played 22, Won 16, Lost 2, Tied 4. Goals 123 against 12.

J. J. Bayley, Clapton F.C; A. K. Campbell, Southampton F.C.; W. O. Clemmenson, Darlington F.C.; C. Copeland, Glossop F.C.; E. J. Cotton, Nunhead F.C.; W. Davidson, Falkirk F.C.; E. J. Eastwood, Ilford and West Ham United; Thomas Fitchie, Woolwich Arsenal and Queens Park; G. R. Hoare, Woolwich Arsenal; M. Lemoine, Shepard's Bush F.C.; H. C. Littleworth, Fulham F.C.; Fred H. Milne, Sheffield United F.C.; J. Brown Sim, Sheffield United and Queens Park; R. Simon, Notts County F.C.; W. Stanser, Rotherham Town F.C.

Oct. 2	Pilgrims	4	All New York	0	Livingston, S.I.,N.Y.
5		13	Sons of St. George	0	Baltimore, Md.
7		14	Mount Washington	0	Baltimore, Md.
9		11	All Baltimore	0	Baltimore, Md.
10		5	Scots-Americans	0	Newark, N. J.
12		2	Trenton	1	Trenton, N.J.
14		9	Cincinnati	0	Cincinnati, Ohio
16		5	Blue Bells	0	St. Louis, Mo.
17		10	St. Teresas	1	St. Louis, Mo.
20		1	Gillespie Thistle	1	Gilliespie, Ill.
23		8	Hyde Park Blues	2	Chicago, Ill.
24		3	All Chicago	0	Chicago, Ill.
26		0	Coal City Maroons	0	Coal City, Ill.
30		4	All Western	0	St. Louis, Mo.
31		12	St. Leo's	0	St. Louis, Mo.
Nov. 2		3	Phila. Cricket Clubs	0	Philadelphia, Pa.
4		0	Haverford	1	Philadelphia, Pa.
6		9	Pennsylvania League	0	Philadelphia, Pa.
10		1	Fall River	1	Fall River, Mass.
13		1	Fall River Rovers	2	Fall River, Mass.
14		2	N.Y. Amateur League	2	Brooklyn, N.Y.
16		6	Crescent A.C.	1	Brooklyn, N.Y.

1907 — CORINTHIAN F. C.

Played 11, Won 9, Lost 1, Tied 1. Goals 87 against 7.

C. Wreford Brown, Capt.; B. O. Corbett, N. S. Cornelius, R. D. Craig, S. H. Day, G. N. Foster, G. S. Harris, P. R. May, M. Morgan Owen, C. C. Page, T. S. Rowlandson, W.U. Timmis, G. C. Vassall, B. H. Willett, E. G. Wright.

Aug. 25	Corinthian	5	Chicago	2	Chicago, Ill.
28		10	Cincinnati	0	Cincinnati, Ohio
29		8	Cleveland	0	Cleveland, Ohio
31		6	Cricket Clubs	0	Philadelphia, Pa.
Sept. 1		9	Albions	0	Philadelphia, Pa.
3		12	All-Philadelphia	0	Philadelphia, Pa.

Society for American Soccer History

6	11	All Collegiates	0	New York, N.Y.
8	18	All New York	0	New York, N.Y.
10	7	Newark	1	Newark, N. J.
13	0	Fall River	3	Fall River, Mass.
14	1	Fore River	1	Boston, Mass.

1911 — THE CORINTHIANS

Played and Won 5. Goals 43 against 5.

H. G. Bache, C. E. Brisley, C. Wreford Brown, A. T. Coleby, B. O. Corbett, A. L. Corbett, S. H. Day, S. C. Maples, G. G. Newman, M. Morgan Owen, I. E. Snell, P. A. Sergeant, R. G. Thompson, S. Turner.

Sept. 10	Corinthians	4	All Chicago	0	Chicago, Ill.
11		10	All Chicago	1	Chicago, Ill.
16		4	All New York	2	New York, N.Y.
18		6	Newark F.C.	2	Newark, N. J.
19		19	Philadelphia	0	Philadelphia, Pa.

1924 — THE CORINTHIANS

Played 5, Won 3, Tied 2. Goals 20 against 4.

Partridge; Morrison, Ashton; Reid, Hunter, Blaxland; Morgan, Knight, Glenister, Chadder, DeKovan.

Sept. 1	Corinthians	8	Penn Freebooters	1	Philadelphia, Pa.
6		1	Philadelphia S.C.	1	Philadelphia, Pa.
8		7	Cricket Clubs	1	Philadelphia, Pa.
10		1	Brooklyn Wanderers	1	Brooklyn, N.Y.
12		3	Haverford	0	Philadelphia, Pa.

1922 — DICK KERR'S LADIES TEAM

Played 8, Won 3, Lost 2, Tied 3. Goals 35 against 34.

Sailed from New York Oct. 26.

Misses O. Askees, C. Bessler, M. Clayton, Crozler, Graham, J. Harris, F. Haslam, Alice Knell, Capt.; Lee, L. Parr, C. Pomier, A. Walker, J. Walmsley, A. Woods, F. Retford.

Sept. 24	Dick's Kerr's	3	Paterson F. C.	6	Paterson, N.J.
30		4	J. P. Coats	4	Pawtucket, R.I.
Oct. 1		5	Centro-Hispano	7	New York City, N.Y.
8		4	Washington Stars	4	Washington, D.C.
11		5	New Bedford F.C.	4	New Bedford, Mass.
14		8	New York F.C.	4	New York City, N.Y.
15		2	Fall River	2	Fall River, Mass.
22		4	Batimore S.C.	3	Baltimore, Md.

1929 — PRESTON NORTH END

Played 11, Won 7, Lost 2, Tied 2. Goals 30 against 18.

Bargh, Craven Crawford, Ewart, Grierson, Hair, Harrison, Kerr, Nelson, Nesbit, Parry, Reid, Robson, Russell, Smith, Ward.

May 18	Preston North End	1	Hakoah	1	New York City, N.Y.
19		1	New York Giants	1	New York City, N.Y.
25		4	Heidelberg	2	Pittsburgh, Pa.
26		0	All-Stars	1	Detroit, Mich.
30		5	All-Stars	1	Cleveland, Ohio

Society for American Soccer History

June 1		6	Amateur Stars	2	Chicago, Ill.
2		3	Professional Stars	2	Chicago, Ill.
8		1	Bethlehem Steel	5	New York City, N.Y.
9		2	Bethlehem Steel	1	Providence, R.I.
11		4	All-Stars	1	Toronto, Ont.
12		3	All-Stars	1	Montreal, Que.

1937 — CHARLTON ATHLETIC F.C. OF LONDON

Played 6, Won 5, Tied 1. Goals 22 against 2. Sailed from New Yo July 1.

Bertram, Boulter, Cann, Ford, Green, Hobbis, Jobling, Oakes, Robinson, Shreeve Stephenson, Tadman, Tann, Turner, Welsh, Wilkinson, Williams, James Seed, manager; James Trotter, trainer; D. H. Clark, Albert Glikstein, directors; Dr. G. B. Montgomery.

May 30	Charlton Athletic	1	AmericanLeague	1	New York City, N.Y.
June 2		2	W. Penn Stars	0	Pittsburgh, Pa.
5		4	Michigan Stars	0	Detroit, Mich.
6		4	Illinois Stars	1	Chicago, Ill.
26		7	E. Penn Stars	0	Philadelphia, Pa.
27		4	U.S.S.F.A.	0	New York City, N.Y.

1946 — LIVERPOOL F. C.

Played 10, Won 10. Goals 70 against 10.

Jack Balmer, Cyril Done, Harry Eastman, William Fagan, James Harley, Laurie Hughes, William Jones, Berry Niewwenhuys, Robert Paisley, Robert Priday, Bernard Ramsden, Ken Seddon, Cyril Sidlow, Edwin Spicer, Philip Taylor, George Kay, manager; Albert Shelley, trainer; W. McConnell, chairman; S. R. Williams, R. K. Milne, J. H. Troop, directors.

May 12	Liverpool	3	New York Stars	1	New York City, N. Y.
15		9	Baltimore Stars	0	Baltimore, Md.
19		5	American League Stars	0	New York City, N. Y.
22		3	New England Stars	2	Fall River, Mass.
26		12	Philadelphia Stars	0	Philadelphia, Pa.
31		5	St. Louis Stars	1	St. Louis, Mo.
June 2		9	Chicago Stars	3	Chicago, Ill.
5		11	Ulster United	1	Toronto, Ont.
9		3	Kearny Stars	1	Kearny, N.J.
11		10	American League Stars	1	Brooklyn, N.Y.

1948 — LIVERPOOL F. C.

Played and won 11 games. Goals 63 against 16. Arrived New York May 12. Left New York June 24.

Jack Balmer, Kenneth Brierley, Wm. Fagan, James Harley, Laurie Hughes, Wm. Jones, Raymond Lambert; Wm. Liddell, Robert Paisley, Stanley Polk, Robert Priday, Cyril Sidlow, Erwin Spicer, Albert Stubbins, Ph Taylor, George Kay, Manager; Al Shelley, trainer; S. R. Williams, G. A Richards, Ralph Milne, Jim Troop, directors.

May 16	Liverpool	5	New York Stars	1	New York City, N. Y.
20		9	Baltimore Stars	2	Baltimore, Md.
23		5	Philadelphia Stars	2	Philadelphia, Pa.

Society for American Soccer History

	26	6	Fall River Stars	0	Fall River, Mass.
	30	9	American League Stars	2	New York City, N. Y.
June	1	4	St. Louis Stars	2	St. Louis, Mo.
	3	4	Montreal Stars	2	Montreal, Que.
	9	5	New York Stars	2	Brooklyn, N.Y.
	15	5	Ulster United	1	Toronto, Ont.
	18	3	Djurgarden F.C.	2	Brooklyn, N.Y.
	20	8	New Jersey Stars	0	Newark, N.J.

1949 — NEWCASTLE UNITED F.C.

Played 10, Won 10. Goals 78 against 14.
Arrived New York May 17. Left Montreal June 24.

Ronnie Batty, Frank Brennan, Robert Cowell, Benny Craig, Norman Dudgin, Jack Fairbrother, Bob Fraser, Douglas Graham, Joe Harvey, Capt.; Frank Houghton,, Jock Millburn, Robert Mitchell, George Robledo, Ernest Taylor, Thomas Thompson, Thomas Walker. George Martin, manager; Norman Simth, trainer. Dr. Robert Rutherford, chairman; Stanley Seymour, Wilfred Taylor, William McKeag.

May	19	Newcastle United	4	Montreal	1	Montreal,, Que.
	24		7	Toronto	2	Toronto, Ont.
	28		13	Saskatoon	2	Saskatoon,
June	1		16	Edmonton	1	Edmonton
	4		5	Vancouver	1	Vancouver, B. C.
	5		11	Washington Stars	1	Seattle, Wash.
	7		8	Vancouver	1	Vancouver, B. C.
	11		7	Winnepeg	4	Winnipeg, Man.
	15		4	Kamraterna	0	Toronto, Ont.
	19		3	Kamraterna	0	New York, N. Y.

HUNGARIAN TEAMS

1929 — SABARIA F.C. OF BUDAPEST

Played 3, won 1, Lost 2. Goals 7 against 9.

Bass, Birl, Buresch, Hajos, Holzbauer, Kasa, Kovacs, Nagy, Pawolny, Pesovnik, Prem, Preur, Stroffan, Tarnok, Vamos Weinhardt.

March	16	Sabaria	0	Hakoah	3	New York City
	17		6	New York Giants	4	New York City
	19		1	Giants-Hakoah	2	New York City

1930 — HUNGARIA F.C. (M.T.K.) OF BUDAPEST

Played 8, Won 8. Goals 36 against 11.

Baratky, Feher, Kalman, Hauer, Hirzer, Kieber, Kiscsis, Mandl, Nagy, Sebastis, Sebes, Skivarck, Titschka, Ujavai, Ujosei, Varga, Weber.

Aug.	10	Hungaria	4	New York Nationals	2	New York City
	17		6	Brooklyn Wanderers	3	Brooklyn, N.Y.
	18		6	Lehigh Valley League	1	Lehigh, N.Y.
	20		4	Bruell F.C.	1	Cleveland, Ohio
	21		2	American League	1	Detroit Mich.
	23		5	Sparta F.C.	1	Chicago, Ill.
	24		7	Maccabi Stars	2	Chicago, Ill.
	28		2	New York Stars	0	New York City

Society for American Soccer History

1947 — FERENCVAROSI (F.T.C.) OF BUDAPEST

Csanadi, Csikos, Dr. Gyulai, Hernadi, Keri, Meszaros, Mike, Onodi, Kis Peter, Puskas, Rudas, Sarosi, Szabo, Szoke, Szusza, Dr. Berke, manager.

Aug. 21 Ferencvarosi 12 New York Hungarian F.C. 1 Brooklyn, N.Y.

IRISH TEAMS

1949 — BELFAST CELTIC F.C.

Played 10, Won 6, Lost 2, Tied 2. Goals 30 against 17.

Scorers, Campbell 6, Walker 6, Bonnar 5, Hazlett 4, Denvir 2, Dorman 2, Moore 2, Douglas 1, McMillen 1, O'Flanagan 1.

Arrived S.S. Mauretania May 3. Left New York, S.S. Mauretania June 14.

Tom Ahearne, Patrick Bonnar, John Campbell, Charles Currie, John Denvir, Thomas Dorman, Joseph Douglas, George Hazlett, Robin Lawler, Kevin McAlinden, Billy McMillen, Alex Moore, James Murdough, Michael O'Flanagan, Reginald Simpson, Harry Walker. Elisha Scott, Manager. Patrick McGuigan, Trainer. Austin Donnelly, Chairman; Patrick McAlinden, Ray McAlinden, Dan McSporring, Dr. McGorley.

May	8	Belfast Celtic	2	New York All-Stars	2 Randalls Island N.Y.
	14		5	Ulster United	0 Toronto, Ont.
	15		3	New Jersey All-Stars	0 Kearny, N. J.
	18		1	New England All-Stars	2 Fall River, Mass.
	25		6	Philadelphia All-Stars	4 Phiadelphia, Pa.
	29		2	Scottish Nationas	0 Randalls Island N.Y.
	30		3	Philadelphia Nationals	3 Randalls Island N.Y.
June	1		4	Montreal Stars	1 Montreal, Que.
	5		4	Kennedy F. F.	2 Detroit, Mich.
	12		0	Kamraterna F. C.	3 Randalls Island N.Y.

ISRAELI TEAMS

1927 — MACCABI F.C. OF TEL AVIV

Played 10, Won 5, Lost 4, Tied 1. Goals 24 against 20.

Welcomed in New York June 2.

Bader, E. Blau, G. Blau, Duetsch, Erbstein, Fischer, Fuchs, Grosz, Gruenblatt, Jacob, Laszlo, Laxol, Lederer, Lumek, Potzonorsky, Rosenberg, Schillinger, Skalitzer, Stern, Weiss, Zelivansky, Dr. Haim Weissberg, president.

June	5	Maccabi	6	New York Stars	4 Brooklyn, N.Y.
	12		1	Giants-Bethlehem Steel	1 New York City
	19		1	Chicago	4 Chicago, Ill
	26		0	Indiana Flooring F.C.	2 New York City
July	3		1	Brooklyn Wanderers F.C.	2 Brooklyn, N.Y.
	4		5	Philadelphia Stars	2 Philadelphia, Pa.
	17		3	American-Hungarian F.C.	1 Cleveland, Ohio
	24		3	Galicia F.C.	0 Brooklyn, N.Y.
	31		2	Hispano F.C.	3 Brooklyn, N.Y.
Aug.	7		2	Brooklyn Wanderers F.C.	1 Brooklyn, N.Y.

Society for American Soccer History

1936 — MACCABI F.C. OF TEL AVIV

Played 12, Won 5, Lost 5, Tied 2. Goals 24 against 20.

Arrived New York Sept. 14. Arrived Tel Aviv, Dec. 1.

Beth-Halvef, Birstein, Donnerfield, Elsner, Epstein, Felt, Herman, Liberman, Machlis, Merimowitsch, Metalon, Oscharoff, Pollack, Panz, Rezich, Schlager, Sedi, Weinberg, Zelivansky.

Sept.	27	Maccabi	6	New York Stars	0	Brooklyn, N.Y.
Oct.	4		1	Philadelphia Passon F.C.	0	Philadelphia, Pa.
	11		1	American League Stars	0	New York City
	18		2	Michigan S.S.C.	2	Detroit, Mich.
	25		1	Illinois S.S.C.	0	Chicago, Ill.
	28		2	St. Louis Shamrock F.C.	3	St. Louis, Mo.
Nov.	1		2	Boston Celtic F.C.	3	Boston, Mass.
	3		7	New Jersey State Stars	1	Newark, N.J.
	5		0	Philadelphia Passon F.C.	2	Philadelphia, Pa.
	8		1	American League Stars	4	New York City
	15		1	Sparta F.C.	1	Chicago, Ill.
	22		0	Chicago Maccabi	4	Chicago, Ill.

1947 — HAPOEL F.C. OF TEL AVIV

Played 9, Won 3, Lost 2, Tied 4. Goals 11 against 11.

Arrived New York April 6. Left New York June 25.

Aron, Ben-Zeev, Choderov, Cohen, Czeczyk, Ehrlich, Fried, Fuchs, Habibi, Kresneansky, Meitner, Melamed, Nebenhauz, Palman, Raskin, Rosenbaum, Scwalb, Shevel, Zimmerman. Coaches, Baar, Poliakov. Representative, Glovinsky.

*May	4	Hapoel	2	New York Stars	0	New York City
	11		2	Hakoah-Sparta	2	Chicago, Ill.
	21		2	St. Louis Stars	2	St. Louis, Mo.
	28		2	San Francisco Stars	4	San Fr'isco, Cal.
June	1		1	Los Angeles Stars	1	Los A'geles, Cal.
	10		0	American League Stars	0	New York City
	12		1	Philadelphia Stars	0	Philadelphia, Pa.
	15		1	Detroit Stars	0	Detroit, Mich.
	*17		0	American League Stars	2	Brooklyn, N.Y.

* Televised.

1948 — ISRAELI NATIONAL TEAM

Played 3, Lost 3. Goals 4 against 10.

Arrived Idlewild Airport, New York, Sept. 21, 1948.

Abraham Bendersky, Samuel Ben-Dror, Abraham Bogdanoff, Jocko Farhi, capt; Eli Fuchs, Jehoshua Glasser, Aaron Meier, Joseph Miramovitz, Abraham Perelman, Abraham Rosenbaum, Isaac Schnauer, Naftali Schwalb, Sgt. Shalon Shumelson, Elazar Spiegel, Moshe Varon, Ernest Veremesh, Israel Weiss, Simon Zimmerman. Egor Polak, coach.

Sept.	25	Israeli	1	U.S. Olympians	3	New York, N.Y.
Oct.	15		1	U.S. All-Stars	4	Philadelphia, Pa.
	17		2	American League Stars	3	Brooklyn, N. Y.

Society for American Soccer History

ITALIAN TEAMS

1928 — PALESTRA ITALIA F.C.

A team selected from Bologna, Brescia, Genoa, Leghorn, Milan, Padoga, Rome and Turin.

Played 10, Won 6, Lost 4. Goals 28 against 23.

Arrived New York Aug. 4.

Ardizzone, Barbieri, Bellardi, Busini, Frisoni, S. Frisoni, Giulianni, Magnozzi, Morette, Pasolini, Pastore, Prosperi, Trivelline, Valentino, Zennello, Valerio, manager; D. Rodriques, business manager; Lugi Velmi, trainer; Mario Torrensoni, Italian Soccer Association.

Aug. 5	Palestra	1	New York Stars	2	New York City
11		8	Philadelphia Stars	3	Philadelphia, Pa.
12		3	New York Nationals	1	New York City
19		2	Brooklyn Wanderers	3	Brooklyn, N.Y.
25		1	New York Giants	0	New York City
26		2	Fall River F.C.	4	Tiverton, R.I.
29		5	New York Giants	3	New York City
Sept. 2		1	Sparta	5	Chicago, Ill.
3		4	Detroit Stars	2	Detroit, Mich.
5		1	Galicia F.C.	0	New York City

1949 — MILANO INTERNAZIONALE F.C.

Played 6, Won 6. Goals 43 against 12.

Scorers, Lorenzi 8, Armano 7, Nyers 7, Amadei 6, Campatelli 4, Lerici 4, Fattori 3, Bearzot 2, Meczza 1, Pozzi 1.

Camillo Achilli, Amedeo Amadei, Gino Armano, Enzo Bearzot, Aldo Campatelli, capt.; Guido Campiolo Osvaldo Fattori, Angelo Franzosi, Attilio Giovannini, Raffaele Gualata, Giovanni Invernizzi, Roberto Lerici, Benito Lorenzi, Gino Marinetti, Annibale Meczza, Stefano Nyers, Franco Pian, Pier Carlo Pozzi. Casa Bartoloneo Delia, trainer; Mico Mirosevich, Luigi Soncini, directors.

July 10	Milano	8	New York Stars	2	Randals Island, N. Y.
14		12	Kearny-Philadelphia	4	Newark, N. J.
17		5	American League Stars	0	Randalls Island, N. Y.
19		9	Montreal Stars	3	Montreal, Que.
24		5	U.S. Stars	1	Randalls Island, N. Y.
26		4	Philadelphia Stars	2	Philadelphia, Pa.

MEXICAN TEAMS

1930 — MARTE F.C. OF MEXICO CITY

Played 10, Won 1, Lost 6, Tied 3. Goals 18 against 26.

Alatorre, Avila, Camarena, Hernandez, Lopez, Lozano, Matre, Mayer, Nadal, Nova, Rios, Rivera, Rodriques, J. Sanchez, R. Sanchez, Solar, Antil, trainer; Nosetti, delegate.

June 29	Marte	1	Brooklyn Wanderers	2	Brooklyn, N.Y.
July 4		1	Hispano	1	New York City

Society for American Soccer History

	6	2	Galicia	2	Brooklyn, N.Y.
	10	3	New York Nationals	4	New York City
	16	3	Bricklayers	5	Chicago, Ill.
	17	2	Sparta	3	Chicago, Ill.
	23	0	Slavia	4	Cleveland, Ohio
	24	1	Lackawana Hispano	1	Lack'wana, N.Y.
	31	1	Iberico	4	Detroit, Mich.
g.	6	4	West Point Academy	0	West Point, N.Y.

1940 — ATLANTE F.C.

Played 6, Won 4, Tied 2. Goals 20 against 8.

Alonso, Estrada, Garcia, Guiterez, Heranz, Huth, Lopez, Mendoza, Navarro, Ortiz Ramos, Romero, Soto, Ventoira, Zamudio.

May	19	Atlante	1	New York Americans	0	New York City
	26		2	American League Stars	2	New York City
	30		6	Brooklyn Hispano	2	New York City
June	2		1	So. New England	1	Tiverton, R.I.
	5		6	St. Louis Stars	1	St. Louis, Mo.
	9		4	Sparta	2	Chicago, Ill.

1942 — ATLANTE F.C.

Played 6, Won 2, Lost 2, Tied 2. Goals 16 against 14.

Alonso, Buenabad, Cazarin, Fau. Garcia, Fer. Garcia, Guiterez, Huth, Leon, Medina, Mendoza, Munloch, Olivares, Palomino, Ramos, Ventoira, Zamudio.

May	24	Atlante	3	Metropolitan Stars	3	New York City
	29		6	Baltimore Stars	3	Baltimore, Md.
	31		2	Philadelphia Stars	3	Philadelphia, Pa.
June	7		0	N.Y. Americans-Hispano	2	New York City
	10		4	Kearny Americans	2	Kearny, N.J.
	14		1	New York Stars	1	New York City

1948 — ATLANTE F.C.

Played 6, Won 6. Goals 41 against 12.
Salvador Arizmendi Horacio Cazarin, Ricardo Escandon, Enrique Estevez, Guillermo Gonzales, Jose Gutierrez, Alberto Medina, C. Mendosa, Jaime Mesa, Salvador Mota, Julio Munlock, Mateo Nicolau, Miguel Noguera, Roberto Noriega, Raul Ochoa, A. Orgel, Antonio Ramos, Miguel Segura, Martin Vantolra, Federico Villavicencio. Manager, Louis Gorss.

Aug.	15	Atlante	5	All-Stars	1	San Francisco
	22		5	All-Stars	3	San Francisco
	28		8	Mexico A.C.	1	San Francisco
	29		8	Scots	3	Los Angeles
Sept.	5		7	Magyars	2	Los Angeles
	6		8	Pan-American	2	Hollywood

Society for American Soccer History

1921 — THIRD LANARK F.C. OF GLASGOW

Played 6, Won 5, Tied 1. Goals 25 against 10.

Scorers, Wilson 13, Rankin 4, Thompson 4, McBain 1, Bennett 1, McMenemy 1, Maxwell 1.

Sailed from New York July 25.

Bennett, Albion Rovers F.C.; Brown, Motherwell F.C.; Brownlie, Third Lanark, F.C.; Bulloch, Patrick Thistle F.C.; Gordon, Dunfermline, Athletic F.C.; Low, Dunfermline Athletic F.C.; Maxwell, Dunfermline Athletic F.C.; McAndrew, Third Lanark F.C.; McBain, Ayr United F.C.; McCormick, Third Lanark F.C.; McMenemy, Patrick Thistle F.C.; Orr, Third Lanark F.C.; Rankin, Motherwell F.C.; Scott, Dumbarton F.C.; Thompson, Aberdeen F.C.; Wilson, Dunfermline F.C.

July	10	Third Lanark	4	Celtics of N.J.	2	Jersey City, N.J.
	13		8	Bethlehem Steel	1	Lehigh Univer.
	16		3	Philadelphia	1	Philadelphia, Pa.
	17		2	New York F.C.	1	New York City
	18		6	General Electric	3	Lynn, Mass.
	21		2	Fall River F.C.	2	Fall River, Mass.

1928 — GLASGOW RANGERS F.C.

Played 10, Won 7, Tied 3. Goals 46 against 7.

Scorers, McPhail 14, Fleming 9, Cunningham 8, Marshall 7, Morton 3, Buchanan 2, Archibald 1, Craig 1, Hair 1.

Left Glasgow May 5. Left New York June 27.

A. Archibald, J. Buchanan, T. Craig, A. Cunningham, J. Fleming, D. Gray, W. Hair, R. Hamilton, T. Hamilton, J. Marshall, W. McCandless, R. McPhail, D. Meiklejohn, A. Morton, T. Muirhead, J. Simpson, W. Struth. manager; J. Kerr, trainer; D. Graham, J. Bowie, directors.

May	30	Glasgow Rangers	8	National League Select	2	Brooklyn, N.Y.
June	2		4	Brooklyn Wanderers	0	Brooklyn, N.Y.
	3		0	Fall River F.C.	0	Providence, R.I.
	9		9	Pittsburgh	0	Pittsburgh, Pa.
	10		5	Montreal	1	Montreal, Que.
	13		1	Detroit Stars	1	Detroit, Mich.
	16		7	Ulster United	0	Toronto, Ont.
	18		2	Boston	2	Boston, Mass.
	20		4	Illinois Stars	1	Chicago, Ill.
	23		6	American Stars	0	Brooklyn, N.Y.

1930 — GLASGOW RANGERS F.C.

Played 6, Won 6. Goals 24 against 10.

Left Glasgow May 10. Left New York June 22.

A. Archibald, G. Brown, J. Buchanan, T. Craig, J. Fleming, D. Gray, T. Hamilton, J. Marshall, R. McDonald, R. McPhail, D. Meikeljohn, A. Morton, T. Muirhead, W. G. Nicholson, J. Simpson, J. Smith. W. Struth, manager; J. Kerr, trainer; D. Graham, director.

May	25	Glasgow Rangers	5	New York Nationals	4	New York City
	30		3	Fall River F.C.	2	N. B'df'rd, Mass.

Society for American Soccer History

June	15		4	Sparta	1	Chicago, Ill.
	18		3	Detroit Stars	1	Detroit, Mich.
	20		3	Bruells	1	Cleveland, Ohio
	22		6	Fall River F.C.	1	New York City

1930 — KILMARNOCK F.C.

Played 3, Lost 2, Tied 1. Goals 1 against 5.
Left Greenock May 10. Arrived Greenock July 4.
John Aitken, William Clark, Sam Clemie, Harry Cunningham, John Irvine, James Leslie, John McEwan, Joe Nibloe, James Ramsay, Tom Robertson, Matthew Smith, Tom Smith, John Stewart, Abe Wales, Walter Walters, James Williamson, Hugh Spence, manager; James McWhinnie, trainer; A. S. McCulloch, Tom Wylie, Douglas Dick, directors.

June	2	Kilmarnock	1	Bruell F.C.	1	Cleveland, Ohio
	14		0	Brooklyn	1	Brooklyn, N.Y.
	15		0	Fall River	3	Fall River, Mass.

1931 — GLASGOW CELTIC F.C.

Played 12, Won 8, Lost 3, Tied 1. Goals 43 against 18.
Left Glasgow May 13. Left New York July 2.
Wm. Cook, Denis Currie, Charles Geatons, Wm. Hughes, Joe McGhee, James McGrory, Peter McGonigle, James McStay, John Morrison, Charles Napier, Peter Scarff, Hugh Smith, Alex. Thompson, John Thompson, Robert Thompson, Robert Whitelaw, Peter Wilson, Wm. Maley, manager; Wm. Quinn, trainer; Tom White, John McKillop, James Kelly, directors; Tom Maley.

May	23	Glasgow Celtic	6	East Penn. & District	1	Philadelphia, Pa.
	24		3	New York Giants	2	New York City
	30		3	New York Yankees	4	Boston, Mass.
	31		0	Fall River F.C.	1	Tiverton, R.I.
June	6		1	Pawtucket	3	Pawtucket, R.I.
	7		5	Brooklyn Wanderers	0	Brooklyn, N.Y.
	13		7	Carsteels	0	Montreal, Que.
	14		1	Hakoah All-Stars	1	New York City
	21		6	Bricklayers	3	Chicago, Ill.
	27		3	Ulster United	1	Toronto, Ont.
	28		4	New York Yankees	1	New York City
	30		4	Canton S.C.	1	Baltimore, Md.

1935 — SCOTTISH NATIONAL TEAM

Played 4, Won 4. Goals 15 against 2.
Arrived New York May 14. Left New York June 9.
A. Anderson, Hearts of Midlothian F.C.; George Cummings, Patrick Thistle F.C.; Robert Donnelly, Patrick Thistle F.C.; Douglas Duncan, Derby County, F.C.; Alexander Ferguson, St. Johnstone F.C.; Robert Fraser, Aberdeen, F.C.; Hugh Gallagher, Derby County, F.C.; Robert Main, Glasgow Rangers, F.C.; Robert McDonald, Glasgow Rangers F.C.; David Meikeljohn, Capt., Glasgow Rangers F.C.; William Miller, Patrick Thistle F.C.; William Mills, Aberdeen F.C.; William Stevenson, Clyde F.C.; Thomas Smith, Kilmarnock F.C.; Thomas Walker, Hearts of Midlothian F.C.

Society for American Soccer History

David Wilson, Hamilton Academicals F.C.; Peter Wilson, Hibernians F.C.; J. Fleming, president S.F.A.; G. G. Graham, secretary, S.F.A.; J. Bogie, Treasurer S.F.A.; Alex. Wilson (Alan Breck) Glasgow Evening Times.

May	18	Scotland	3	1st German-American F.C.	0	Philadelphia, Pa.
	19		5	American League Stars	1	New York City
	26		3	Illinois Stars	0	Chicago, Ill.
June	9		4	Eastern Stars	1	Newark, N.J.

1939 — SCOTTISH NATIONAL TEAM

Played 5, Won 4, Tied 1. Goals 25 against 7.

R. Bolt, Falkirk F.C.; J. Carabine, Third Lanark F.C.; J. Caskie, Everton F.C.; J. Dawson, Glasgow Rangers F.C.; J. Dykes, Hearts of Midlothian F.C.; B. Ellis, Motherwell F.C.; A. Garrett, Hearts of Midlothian F.C.; J. Gillies, Clyde F.C.; D. Gray, Glasgow Rangers F.C.; G. Hamilton, Aberdeen F.C.; J. Jones, Third Lanark F.C.; W. Lyon, Capt., Glasgow Celtic F.C.; D. McAvoy, Kilmarnock F.C.; M. McDonald, Glasgow Celtic F.C.; T. McKenzie, Motherwell F.C.; T. McIntyre, Hibernians F.C.; A. McNab, Bromwich Albion F.C.; R. Manderson, Queens Park F. C., trainer; G. G. Graham, secretary S.F.A.

May	21	Scotland	1	American League	1	New York City
	24		7	Michigan Stars	1	Detroit, Mich.
	28		10	St. Louis Stars	2	St .Louis, Mo.
*June	18		4	American League	2	New York City
	21		3	New England Stars	1	Providence, R.I.

* After extra time.

1949 — SCOTTISH NATIONAL TEAM

Played 9, Won 8, Lost 1. Goals 35 against 8.

Arrived New York S.S. Queen Mary, May 17. Left New York S.S. Queen Mary, June 22.

Scorers, Waddell 9, Orr 6, Steel 6, Thorton 6, Houliston 3, Reilly 3, Evans 2.

George Aitken, East Fife F.C.; Jim Brown, Hearts of Midlothian F.C.; Sammy Cox, Glasgow Rangers F.C.; Robert Evans, Glasgow Celtic F.C.; John Govan, Hibernian F.C.; William Houliston, Queen of South F.C.; John McKenzie, Partick Thistle F.C.; Thomas Orr, Greenock Morton F.C.; William Redpath, Motherwell F.C.; Lawrence Reilly, Hibernian F.C.; Billy Steel, Derby County F.C.; William Telfer, St. Mirren F.C.; William Thornton, Glasgow Rangers F.C.; William Waddell, Glasgow Rangers F.C.; William Woodburn, Glasgow Rangers F.C.; George Young, Capt. Glasgow Rangers F.C.; Alex Dowdells, Trainer, Glasgow Celtic; George G. Graham, Secretary Scottish F.A.; Robert Williamson, Chairman of S.F.A. Selection Committee W. J. Johnston, R. McKinnon, Dr. Anderson McMillan. Journalists, Archie Wilson (Alan Breck), William J. Gallagher, Tommy Muirhead, Willie Ga

May	25	Scotland	6	St. Louis Stars	0	St. Louis, Mo.
	29		0	Belfast Celtic	2	Randalls Island, N.Y.
	30		4	American League Stars	1	Randalls Island, N.Y.
June	6		3	New Jersey Stars	1	Kearny, N. J.
	8		2	Toronto Stars	0	Toronto, Ont.

Society for American Soccer History

9	5	Canadian Eastern Stars	2	Montreal,, Que.
12	8	Philadelphia Stars	1	Philadelphia, Pa.
15	3	New England Stars	1	Fall River, Mass.
19	4	U.S. National Team	0	Randalls Island, N.Y.

SPANISH TEAMS

1927 — THE REAL MADRID F.C.

Arrived New York Sept. 22 from Mexico. Olivan; Escobar, Urquizo; Pratt, Eparza, J. Pera; Travieso, Menendez, L. Pera, Del Tampo.

Sept. 25	Real Madrid	1	Galicia F. C.	1	Brooklyn, N.Y.

1931 — RACING CLUB MADRID

Played 9, Won 3, Lost 4, Tied 2. Goals 14 against 17.

Armengou, Arturo, Bernaben, Cosme, Gomez, Iries, Lolin, Martinez, Monoz, Mondragon, Platko, Rey, Rubio, Tena, Urretavirigi, Valderrana, Vasquez.

Oct.	11	Racing Club	1	New York Stars	3	Brooklyn, N.Y.
	13		2	New York Giants	6	New York City
	15		2	Hakoah F.C.	1	New York City
	18		3	Prague F.C.	0	Astoria, N.Y.
	24		1	German-Hungarian F.C.	1	Brooklyn, N.Y.
	25		3	Newark S.C.	1	Newark, N.J.
Nov.	1		1	1st German F.C.	1	Newark, N.J.
	3		1	Hakoah F.C.	3	Brooklyn, N.Y.
	8		0	Spanish League Stars	1	Brooklyn, N.Y.

1937 — BARCELONA F.C.

Played 4, Won 4. Goals, 13 against 5.

Argemi, Babot, Balmana, Bardina, Escola, Garcia, Gual, Heros, Iborra, Muddock, Pages, Pedrol, Rafa, Urquiaga, Zabalo.

Sept.	6	Barcelona F.C.	4	Brooklyn Hispano	2	Brooklyn, N.Y.
	12		4	Hispano-St. Mary's Celtic	3	Brooklyn, N.Y.
	19		2	American League Stars	0	Brooklyn, N.Y.
	21		3	Jewish All-Stars	0	New York City

SWEDISH TEAMS

1948 — DJURGARDEN F.C. OF STOCKHOLM

Played 6, Won 5, Lost 1. Goals 36 against 8.

Arrived New York by plane June 16 after winning three games in Iceland.

Carl Andersson, Hans Andersson, Stig Andersson, Arne Blomkvist, Stig Carlsson, Nils Cederborg, Skell Cronqvist, Ivar Eideifjell (Norkopping), Hans Jeppsson (Oryryte), Carl Johansson, Sture Larsson, Bertg Meijer, Ove Nilsson, Stig Nystrom, Ake Pettersson, Gunnar Persson, Bjarne Redelad, Hans Stelius, Birger Stenman, Carl Tornborg, Sigvard Bergh, chairman; Birger Sandberg, manager; Arne Grunander, secretary; Per Kauffeldt, trainer.

June	18	Djurgarden	2	Liverpool F.C.	3	Brooklyn, N.Y.
	26		8	National League Stars	0	Chicago, Ill.
	28		6	St. Louis Stars	1	St. Louis, Mo.

Society for American Soccer History

July	3		7	Greenbacks F.C.	0	Toronto, Ont.
	5		10	New Englad Stars	3	Worcester, Mass.
	8		3	American League Stars	1	Brooklyn, N.Y.

1949 — KAMRATERNA F.C. OF GOTEBORG

Played 9, Won 6, Lost 2, Tied 1. Goals 34 against 13.

Arrived New York June 8. Left New York July 10.

Henry Andersson, Sven Andersson, Sven Appelgren, Holger Bengtsson, Erik Bergqvist, Leif Bjorkman, Dan Ekner, Rune Emanuelsson, Capt.; Lennart Flink, Holger Hansson, Lennart Johansson, Henry Larsson, Gunnar Lindahl, Arne Nyberg, Bertil Rylander, Gosta Schmidt, Stig Sergerdahl, Sven Sjoblom, Gunnar Rydberg, Manager; Fritz Berg, Trainer; Nils Gronwall, President; Nils Akerlund, Secretary; Josef Holsner, Treasurer; Osten Malmberg, Ruben Runnert, Axel Burholm, Tourists.

June	12	Kamraterna	3	Belfast Celtic	0	Randalls Island, N.Y.
	15		0	Newcastle United	4	Toronto, Ont.
	19		0	Newcastle United	3	Randalls Island, N.Y.
	25		3	National League Stars	1	Chicago, Ill.
July	1		10	Winnipeg Stars	1	Winnipeg, Man.
	4		5	Ohio State Stars	0	Cleveland, Ohio
	6		5	National League Stars	1	Toronto, Ont.
	8		1	New England Stars	1	Ludlow, Mass.
	9		7	N.Y.S.S.F.A. Stars	2	Randalls Island, N.Y.

URUGUAY TEAMS

1927 — URUGUAY NATIONAL TEAM

Played 13, Won 9, Lost 3, Tied 1. Goals 34 against 16.

Andrade, Batignani, Castro, Cea, Fernandez, L. Fernandez, Fierantino, Ghierra, Haberli, Mazzali, Petrone, Recoba, Romano, Saldombide, Scarone, Urdinaran, S. Urdinaran, Vanzzino.

Mar.	20	Uruguay	6	Indiana Flooring	1	New York City
	26		2	Brooklyn Wanderers	2	Brooklyn, N.Y.
	27		0	Newark	1	Newark, N.J.
Apr.	2		4	American League	2	New York City
	16		2	Brooklyn Wanderers	0	Brooklyn, N.Y.
	19		2	Boston	3	Boston, Mass.
	24		2	Detroit	1	Detroit, Mich.
May	1		3	Cleveland Stars	0	Cleveland, Ohio
	8		4	St. Louis	1	St. Louis, Mo.
	15		1	Sparta	0	Chicago, Ill.
	22		2	Bricklayers	3	Chicago, Ill.
	28		4	Philadelphia	1	Philadelphia, Pa.
	30		2	Brooklyn Wanderers	1	Brooklyn, N.Y.

1931 — BELLA VISTA OF MONTEVIDEO

Baliesteron; Nazzasi, Mascheroni; Andrade, Rioifo, Dorado; Haberli, Carbone, Borjas, Lago, Triarte.

April	3	Bella Vista	2	Hakoah All-Stars	1	Brooklyn, N.Y.

Society for American Soccer History

LAWS OF THE GAME

U.S.S.F.A. Rule 49. The Laws of the Game as promulgated by the Federation Internationale de Football Association shall come into force at the beginning of the season next ensuing.

LAW 1 — THE FIELD OF PLAY

(1) **Dimensions.** The field of play shall be rectangular, its length being not more than 130 yards nor less than 100 yards and its breadth not more than 100 yards nor less than 50 yards. (In International Matches the length shall be not more than 120 yards nor less than 110 yards and the breadth not more than 80 yards nor less than 70 yards.) The length shall in all cases exceed the breadth.

U.S.S.F.F. CHALLENGE CUP. Length, 110-120 yards. Breadth, 70-80 yards.

AMATEUR CUP. Length, 105-120 yards. Breadth, 60-80 yards.

Where the field of play is less than the minimum allowed but only slightly varying in size special permission to play may be obtained.

Divisional semi-finals, divisional finals and grand final games must be played on fields of proper dimensions.

COLLEGIATE. Length, 100-120 yards. Breadth, 55-75 yards. Suggested for uniformity 120 x 75 yards.

(2) **Marking.** The field of play shall be marked with distinctive lines, **not more than 5 inches in width**, not by a V-shaped rut, in accordance with the plan, the longer boundary lines being called the touch-lines and the shorter lines the goal-lines. A flag on a post not less than 5 ft. high and having a non-pointed top, shall be placed at each corner; a similar flag-post may be placed opposite the half-way line on each side of the field of play, not less than 1 yard outside the touch-line. A half-way line shall be marked out across the field of play. The centre of the field of play shall be indicated by a suitable mark and a circle with a 10 yards radius shall be marked round it.

(3) **The Goal-Area.** At each end of the field of play two lines shall be drawn at right-angles to the goal-line, 6 yards from each goal-post. These shall extend into the field of play for a distance of 6 yards and shall be joined by a line drawn parallel with the goal-line. Each of the spaces enclosed by these lines and the goal-line shall be called a goal-area.

(4) **The Penalty-Area.** At each end of the field of play two lines shall be drawn at right-angles to the goal-line, 18 yards from each goal-post. These shall extend into the field of play for a distance of 18 yards and shall be joined by a line drawn parallel with the goal-line. Each of the spaces enclosed by these lines and the goal-line shall be called a penalty area. A suitable mark shall be made within each penalty-area, 12 yards from the mid-point of the goal-line, measured along an undrawn line at right angles thereto. These shall be the penalty-kick marks. From each penalty-kick mark an arc of a circle, having a radius of 10 yards, shall be drawn outside the penalty-area.

(5) **The Corner Area.** From each corner-flag post a quarter circle, having a radius of 1 yard, shall be drawn inside the field of play.

Society for American Soccer History

(6) **The Goals.** The goals shall be placed on the centre of each goal-line and shall consist of two upright posts, equidistant from the corner-flags and 8 yards apart (inside measurement), joined by a horizontal cross-bar **the longer edge of which shall be** 8 ft. from the fround. The **width and depth** of the goal-posts and the **width and depth** of the cross-bars shall not exceed 5 in.

Nets may be attached to the posts, cross-bars and grounded behind the goals. They should be appropriately supported and be so placed as to allow the goal-keeper ample room.

LAW 2. — THE BALL

The ball shall be spherical; the outer casing shall be of leather and no material shall be used in its construction which might prove dangerous to the players. The circumference of the ball shall not be more than 28 in. nor less than 27 in. The weight of the ball at the start of the game shall not be more than 16 oz. nor less than 14 oz.

COLLEGE. To ensure uniformity only certain brand balls, approved by their own association, are recognized as official playing balls.

LAW 3. — NUMBER OF PLAYERS

The game shall be played by two teams each consisting of not more than eleven players, one of whom shall be the goal-keeper. One of the other players may change places with the goalkeeper during the match provided notice be given to the Referee before such change is made. Except in a match played under the Rules of a Competition, substitutes may be allowed to replace players receiving injuries during a game, subject to this arrangement being agreed upon by both teams before the start of the match. (An International Match in which one of the four British Associations is playing is deemed a match under the rules of a competition.)

Punishment. If without notifying the referee, a player changes to goalkeeper during the game, and then handles the ball within the penalty-area, a penalty-kick shall be awarded. **Any player leaving the field during the progress of the game (except through accident) without the consent of the Referee shall be deemed guilty of ungentlemanly conduct.**

U.S.S.F.A. CHALLENGE & AMATEUR CUPS.

1. A maximum of four (4) substitutes shall be allowed at any time during the game. (This includes regular and overtime periods).
2. Substitution can only be made when the ball is out of play.
3. Substitutes must report to the referee, giving their full names, before being allowed to participate.
4. A player who has been substituted for can return to the same game.
5. A player ordered from the field of play by the referee can be substituted for but cannot again return to the game himself.

COLLEGE. Five (5) substitutions may be made during a game and three (3) players may be resubstituted once during a game, these resubstitutions not counting as any one of the substitutions.

Suggested that when contracts are made an agreement be reached concerning substitutes.

Society for American Soccer History

LAW 4. — PLAYER'S EQUIPMENT

A player shall not wear anything which is dangerous to another player. Boots must conform to the following standard: all **bars** and **studs** must be made of leather or soft rubber; nails shall be driven in flush with the leather or rubber; **bars** shall be transverse and flat, not less than half-an-inch in width, and they shall extend for the total width of the boot and be rounded at the corners; **studs** shall be round in plan, neither conical nor pointed, and not less than half-an-inch in diameter; **combined studs** and **bars** may be worn provided the whole conforms to the general requirements of this Law; **bars** and **studs** on the soles or heels shall not project more than half-an-inch. Metal plates, even though covered with leather or rubber, shall not be worn.

(N.B.—The usual equipment of a player consists of a jersey or shirt, short trousers, stockings and boots. A goalkeeper **must** wear colors which distinguish him from the other players.)

COLLEGE. Numbers on jerseys is mandatory. Minimum size of numerals, 6 inches.

Punishment. For any infringement of this Law, the player at fault shall be sent off the field of play temporarily. He shall not return without first reporting to the Referee, who shall satisfy himself that the player's equipment is in order; the player shall only re-enter the game at a moment when the ball has ceased to be in play.

LAW 5. — REFEREES

A Referee shall be appointed to officiate in each game. He shall:

(a) Enforce the Laws and decide any disputed point. His decision on point of fact connected with the play shall be final so far as the result of the game is concerned. His jurisdiction begins from the time he signals for the kick-off, and his power of penalising shall extend to offences committed when play has been temporarily suspended or when the ball is out of play. He shall, however, refrain from penalising in cases where he is satisfied that by doing so he would be giving an advantage to the offending team.

(b). Keep a record of the game; act as timekeeper and allow the full or agreed time, adding thereto all time lost through accident or other cause.

(**COLLEGE.** The Referee is not responsible for timekeeping. He signals the timekeeper at the commencement of each period and the start and end of any suspension of play. The timekeeper uses a noise making instrument to signal the expiration of time.)

(c) Have discretionary power to stop the game for any infringement of the Laws and to suspend or terminate the game whenever, by reason of the elements, interference by spectators, or other cause, he deems such stoppage necessary. In such a case he shall report the matter to the National or Affiliated Association under whose jurisdiction the game was played, within two days (Sundays not included). Reports will be deemed to be made when received in the ordinary course of post.

(d) Have discretionary power, from the time he enters the field of play, to caution any player guilty of misconduct or ungentlemanly be-

Society for American Soccer History

haviour and, if he persists, to suspend him from further participation in the game. In such cases the Referee shall send the name of the offender to the National or Affiliated Association concerned, within two days after the occurrence (Sundays not included). Reports will be deemed to be made when received in the ordinary course of post.

(e) Allow no person other than the players and linesmen to enter the field of play without his permission.

(f) Stop the game if, in his opinion, a player has been seriously injured, have the player removed as soon as possible from the field of play, and immediately resume the game. If a player is slightly injured, the game shall not be stopped until the ball has ceased to be in play. A player who is able to go to the touch or goal-line for attention of any kind, shall not be treated on the field of play.

(g) Have discretionary power to suspend from further participation in the game, without previous caution, a player guilty of violent conduct.

(h) Signal for recommencement of the game after all stoppages.

LAW 6. — LINESMEN

Two Linesmen shall be appointed, whose duty (subject to the decision of the Referee) shall be to indicate when the ball is out of play and which side is entitled to the corner-kick, goal-kick or throw-in. They shall also assist the Referee to control the game in accordance with the Laws. In the event of undue interference or improper conduct by a Linesman, the Referee shall dispense with his services and arrange for a substitute to be appointed. (The matter shall be reported by the Referee to the National or Affiliated Association having jurisdiction over the offending Linesman.) The Linesmen should be equipped with flags by the Club on whose ground the match is played.

LAW 7. — DURATION OF THE GAME

The duration of the game shall be two equal periods of 45 minutes, unless otherwise mutually agreed upon, subject to the following: **(a)** Allowance shall be made in either period for all time lost through accident or other cause, the amount of which shall be a matter for the discretion of the Referee; **(b)** Time shall be extended to permit of a penalty-kick being taken at or after the expiration of the normal period in either half.

At half-time the interval shall not exceed five minutes except by consent of the Referee.

U.S.S.F.A. NATIONAL JUNIOR CHALLENGE CUP. Rule 7. The duration of the game shall be sixty (60) minutes divided into four (4) equal quarters of fifteen (15) minutes each and there shall be no intermission between the first and second and the third and fourth quarters.

COLLEGE. Played in four (4) equal periods of 22 minutes each. One minute interval between the first and second periods and the third and fourth periods to allow for change of ends. Interval at half-time, between the second and third periods, not to exceed ten (10) minutes.

A student manager from each contestant will be the official timers.

SCHOLASTIC. Duration of game sixty (60) minutes divided into four (4) equal periods of fifteen (15) minuts each.

Society for American Soccer History

LAW 8. — THE START OF PLAY

(a) At the beginning of the game, choice of ends and the kick-off shall be decided by the toss of a coin. The team winning the toss shall have the option of choice of ends or the kick-off.

The Referee, having given a signal, the game shall be started by a player taking a place-kick (i.e., a kick at the ball while it is stationary on the ground in the centre of the field of play) into his opponents' half of the field of play. Every player shall be in his own half of the field and every player of the team opposing that of the kicker shall remain not less than 10 yards from the ball until it is kicked-off; it shall not be deemed in play until it has travelled the distance of its own circumference. The kicker shall not play the ball a second time until it has been played or touched by another player.

(b) After a goal has been scored, the game shall be restarted in like manner by a player of the team losing the goal.

(c) After half-time; when restarting after half-time, ends shall be changed and the kick-off shall be taken by a player of the opposite team to that of the player who started the game.

Punishment. For any infringement of this Law,the kick-off shall be retaken, except in the case of the kicker playing the ball again before it has been touched or played by another player; for this offence, an indirect free-kick shall be taken by a player of the opposing team from the place where the infringement occurred. A goal shall not be scored direct from a kick-off.

(d) After any other temperorary suspension; when restarting the game after a temporary suspension of play from any cause not mentioned else where in these Laws, provided that immediately prior to the suspension the ball has not passed over the touch or goal-lines, the Referee shall drop the ball at the place where it was when play was suspended and it shall be deemed in play when it has touched the ground; if, however, it goes over the touch or goal-lines after it has been dropped by the Referee, but before it is touched by a player, the Referee shall again drop it. A player shall not play the ball until it has touched the ground. If this section of the Law is not complied with the Referee shall again drop the ball.

LAW 9. — BALL IN AND OUT OF PLAY

The ball is out of play:

(a) When it has wholly crossed the goal-line or touch-line, whether on the ground or in the air.

(b) When the game has been stopped by the Referee.

The ball is in play at all other times from the start of the match to the finish including:

(a) If it rebounds from a goal-post, cross-bar or corner-flag post into the field of play.

(b) If it rebounds off either the Referee or Linesmen when they are in the field of play.

Society for American Soccer History

(c) In the event of a supposed infringement of the Laws, until a decision is given.

LAW 10. — METHOD OF SCORING

Except as otherwise provided by these Laws, a goal is scored when the whole of the ball has passed over the goal-line, between the goal-posts and under the the cross-bar, provided it has not been thrown, **carried** or propelled by hand or arm, by a player of the attacking side. Should the cross-bar become displaced for any reason during the game, and the ball cross the goal-line at a point which, in the opinion of the Referee, is below where the cross-bar should have been, he shall award a goal.

The team scoring the greater number of goals during a game shall be the winner; if no goals, or an equal number of goals are scored, the game shall be termed a "draw."

LAW 11. — OFF-SIDE

(20 diagrams illustrating points in off-side follow at the end of these Laws of the Game.)

A player is off-side if he is nearer his opponents' goal-line than the ball **at the moment the ball is played unless:**

(a) He is in his own half of the field of play.

(b) There are two of his opponents nearer to their own goal-line than he is.

(c) The ball last touched an opponent or was last played by him.

(d) He receives the ball direct from a goal-kick, a corner-kick, a throw-in, or when it is dropped by the Referee.

Punishment. For an infringement of this Law, an indirect free-kick shall be taken by a player of the opposing team from the place where the infringement occurred.

A player in an off-side position shall not be penalised unless, in the opinion of the Referee, he is in interference with the play or with an opponent, or is seeking to gain an advantage by being in an off-side position.

LAW 12. — FOULS AND MISCONDUCT

A player shall be penalized if he intentionally:

(a) Kicks, strikes, **attempts to kick or strike,** or jumps at an opponent.

(b) Trips, including throwing or attempting to throw an opponent by use of the legs, or by stooping in front of or behind him.

(c) Handles the ball, i.e., carries, strikes or propels it with the hand or arm. (This does not apply to the goalkeeper within his own penalty area.)

(d) Holds or pushes an opponent with his hand, or with any part his arm.

(e) Charges in a violent or dangerous manner or charges an opponent from behind unless the latter be obstructing.

(f) Charges fairly, i.e., with the shoulder, when the ball is not within

Society for American Soccer History

playing distance of the players concerned and they are definitely not attempting to play it.

(g) Charges a goalkeeper except when he is:
(i) holding the ball, or
(ii) obstructing an opponent, or
(iii) has passed outside the goal area.

(h) When playing as goalkeeper, carries the ball, i.e., takes more than four steps while holding the ball, without bouncing it on the ground.

(i) Joins his team after the game commences or returns to the field while the game is in progress, without reporting to the Referee.

(j) Plays in a manner considered by the Referee to be dangersous, e.g., **attempting to kick the ball when held by the goalkeeper.**

(k) Commits ungentlemanly conduct which shall be deemed to include:
(i) Persistent infringement of the laws of the game, and
(ii) Showing, by word or action, dissent from any decision given by the Referee.

COLLEGE. First line-delete intentionally. Referee is sole judge of fact.
(g) There will be **NO CHARGING OF GOALKEEPER** when in possession—he will be allowed and restricted to four steps, to get rid of ball — if he fails to do this — an indirect free-kick will be awarded against him.
(k) is then deleted.

Punishment:

1. Outside the penalty area.
For any infringement of a, b, c, d, e, a direct free-kick shall be taken by a player of the opposite team from the place where the infringement occurred.

2. Inside the penalty area.
(A) For any infringement of a, b, c, d, e, by the attacking team the punishment shall be a direct free-kick for the defending team from the place where the infringement occurred. For an infringement of h, the punishment shall be an indirect free-kick.
(B) For any infringement of a, b, c, d, e, by the defending team, the punishment shall be a penalty-kick. A penalty-kick can be awarded irrespective of the position of the ball, if in play, at the the time an offence within the penalty area is committed, but it shall be awarded only for the following nine offences, intentionally committed by a player of the defending side within the penalty area:
(1) Handling the ball.
(2) Holding an opponent.
(3) Striking or attempting to strike an opponent.
(4) Pushing an opponent.
(5) Tripping an opponent.
(6) Kicking or attempting to kick an opponent.
(7) Jumping at an opponent.
(8) Charging violently, or in a dangerous manner.
(9) Charging from behind.

Society for American Soccer History

(C) For any infringement of g the punishment shall be an indirect free-kick.

3. Inside or outside the penalty area.
   For any infringement of f or j, an indirect free-kick shall be taken by a player of the opposite team from the place where the infringement occurred.
4. For any infringement of i the offending player shall be cautioned and, if the game has been stopped, it shall be restarted by the Referee dropping the ball at the place where the infringement occurred, but if the player commits a more important offence he shall be penalized according to that portion of the Law infringed.
5. For any infringement of k the offending player shall be cautioned and an indirect free-kick shall be taken by a player of the opposite team from the place where the infringement occurred.

A player shall be ordered **from the Field of Play** if he:

1. Persists in misconduct after having received a caution.
2. Is guilty of violent conduct, i.e., using foul or abusive language, or if, in the opinion of the Referee, he is guilty of serious foul play.

If play be stopped by reason of a player being ordered from the field for an offence without a separate breach of the Law having been committed, the game shall be resumed by an indirect free-kick to be taken by a player of the opposite team from the place where the infringement occurred.

LAW 13. — FREE-KICK

Free-kicks shall be classified under two heads: "Direct" (from which a goal can be scored direct against the offending side), and "Indirect" (from which a goal cannot be scored unless the ball has been played or touched by a player other than the kicker before passing through the goal).

When a direct or indirect free-kick is being taken, a player of the opposite side shall not approach within 10 yards of the ball until it is in play, unless he be standing on his own goal-line, between the goal-posts. If a player of the opposing team approaches within 10 yards before the kick is taken the Referee shall delay the taking of the kick until the Law is complied with. The ball shall not be deemed in play until it has travelled the distance of its own circumference. The ball must be stationary when the kick is taken, and after taking the kick, the kicker shall not play the ball a second time until it has been touched or played by another player. In the case of a free-kick being awarded to the defending side in the penalty area, the goalkeeper shall not receive the ball into his hands in order that he may thereafter kick it into play; the ball must be kicked direct into play beyond the penalty-area, and if this part of the Law is not complied with the kick shall be retaken.

Punishment:

If the kicker, after taking the free-kick, plays the ball a second time before it has been touched or played by another player an indirect free-kick shall be taken by a player of the opposing team from the spot where the infringement occurred.

Society for American Soccer History

LAW 14. — PENALTY-KICK

A penalty-kick shall be taken from the penalty-mark and, when it is being taken, all players, with the exception of the player taking the kick, and the opposing goalkeeper, shall be within the field of play but outside the penalty-area, and at least 10 yards from the penalty-mark. The opposing goalkeeper must stand (without moving his feet) on his own goal-line, between the goal-posts, until the ball is kicked. The player taking the kick must kick the ball forward; he shall not play the ball a second time until it has been touched or played by another player. The ball shall be deemed in play directly it is kicked, i.e., **traveled the distance of its circumference,** and a goal may be scored direct from such a penalty-kick. If the ball touches the goalkeeper before passing between the posts, when a penalty-kick is being taken at or after the expiration of half-time or full-time, it does not nullify a goal. If necessary, time of play shall be extended at half-time or full-time to allow a penalty-kick to be taken.

Punishment:

(a) For any infringement by the defending team the kick shall be retaken, if a goal has not resulted.

(b) For any infringement by the attacking team, other than by the player taking the kick the kick shall be retaken, if a goal has resulted.

(c) For any infringement by the player taking the penalty-kick, a player of the opposing team shall take an indirect free-kick from the spot where the infringement occurred.

LAW 15. — THROW-IN

When the whole of the ball passes over a touch-line, either on the ground or in the air, it shall be thrown in from the point where it crossed the line, in any direction, by a player of the team opposite to that of the player who last touched it. The thrower at the moment of delivering the ball must face the field of play and part of each foot shall be either on or outside the touch-line. The thrower shall use both hands and shall deliver the ball from over his head. The ball shall be in play immediately it is thrown, but the thrower shall not again play the ball until it has been touched or played by another player. A goal shall not be scored direct from a throw-in.

COLLEGE

When the whole of the ball passes over the touch line, either on the ground or in the air, it shall be **Kicked-in** from the point where it crossed the line, in any direction, by a player of the team opposite to that of the player who last touched it. The ball shall be in play immediately it is kicked, but the kicker shall not again play the ball until it has been touched or played by another player. A goal shall not be scored direct from a kick-in.

A player cannot be offside on a kick-in from touch, but this protection ceases the amount a second player plays the ball. On the kick-in

Society for American Soccer History

the opponents must stand at least ten yards away from the ball, until kicked.

Penalty for the kicker, kicking the ball twice before it has been played by a second player, indirect free-kick for the opposing team.

Punishment:

(a) If the ball is improperly thrown in the throw-in shall be taken by a player of the opposing team.

(b) If the thrower plays the ball a second time before it has been touched or played by another player, an indirect free-kick shall be taken by a player of the opposing team from the place where the infringement occurred.

LAW 16. — GOAL-KICK

When the whole of the ball passes over the goal-line excluding that portion between the goal-posts, either in the air or on the ground, having last been played by one of the attacking team, it shall be kicked direct into play beyond the penalty-area, from a point within that half of the goal-area nearest to where it crossed the line, by a player of the defending team. A goalkeeper shall not receive the ball into his hands from a goal-kick in order that he may thereafter kick it into play. If the ball is not kicked beyond the penalty-area, i.e. direct into play, the play shall be retaken. **The kicker shall not play the ball a second time until it has touched or been played by another player.** A goal shall not be scored direct from such a kick. Players of the team opposing that of the player taking the goal-kick shall **remain outside the penalty area whilst the kick is being taken.**

Punishment:

If a player taking a goal-kick plays the ball a second time after it has passed beyond the penalty-area, but before it has touched or been played by another player, an indirect free-kick shall be awarded to the opposing team, to be taken from the place where the infringement occurred.

LAW 17. — CORNER-KICK

When the whole of the ball passes over the goal-line, excluding that portion between the goal-posts, either in the air or on the ground, having last been played by one of the defending team, a member of the attacking team shall take a kick from within the quarter-circle at the nearest corner flag-post, which must not be removed, i.e. a corner-kick. A goal may be scored direct from such a kick. Players of the team opposing that of the player taking the corner-kick shall not approach within 10 yards of the ball until it is in play, i.e. it has travelled the distance of its own circumference, nor shall the kicker play the ball a second time until it has been touched or played by another player.

Punishment:

For an infringement of this Law, an indirect free-kick shall be awarded to the opposing team, to be taken from the place where the infringement occurred.

Society for American Soccer History

GOALS

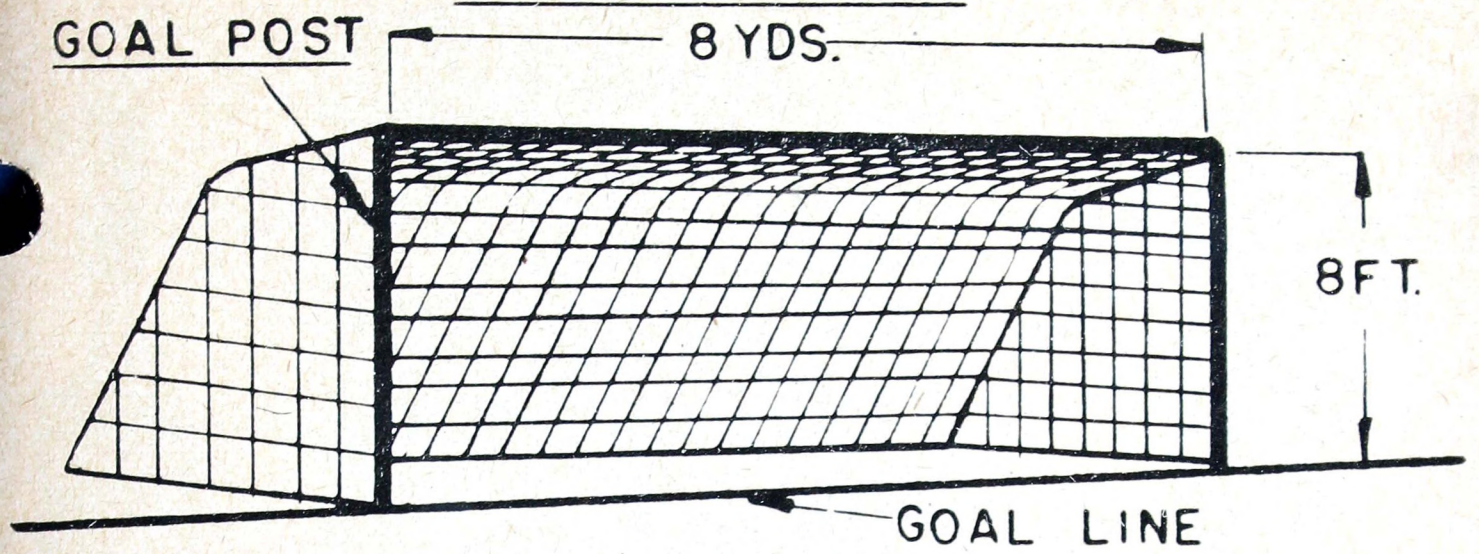

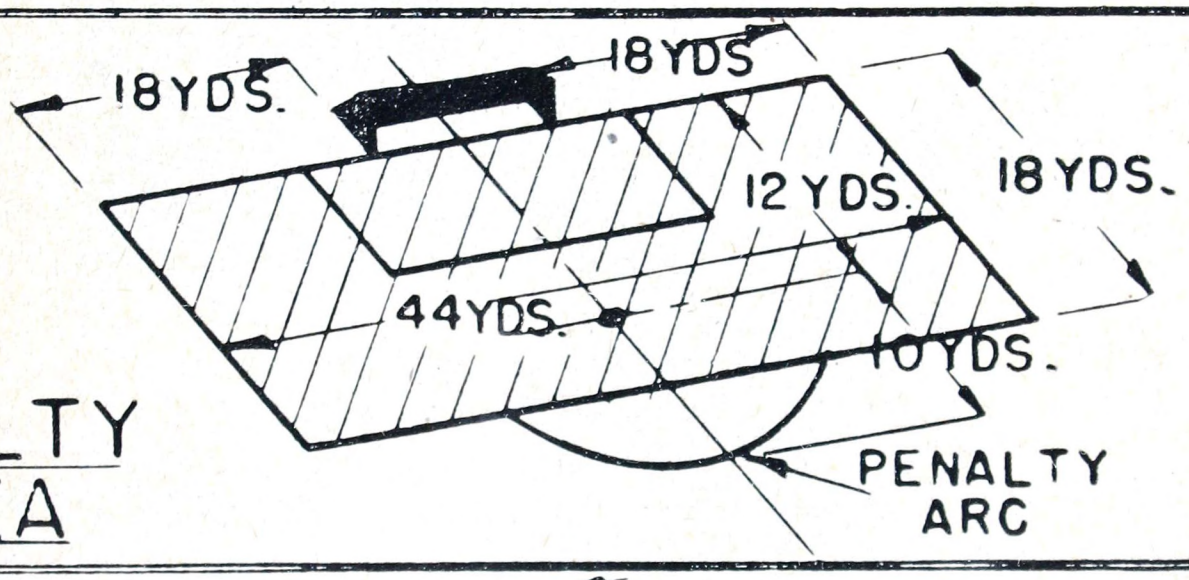

PENALTY AREA

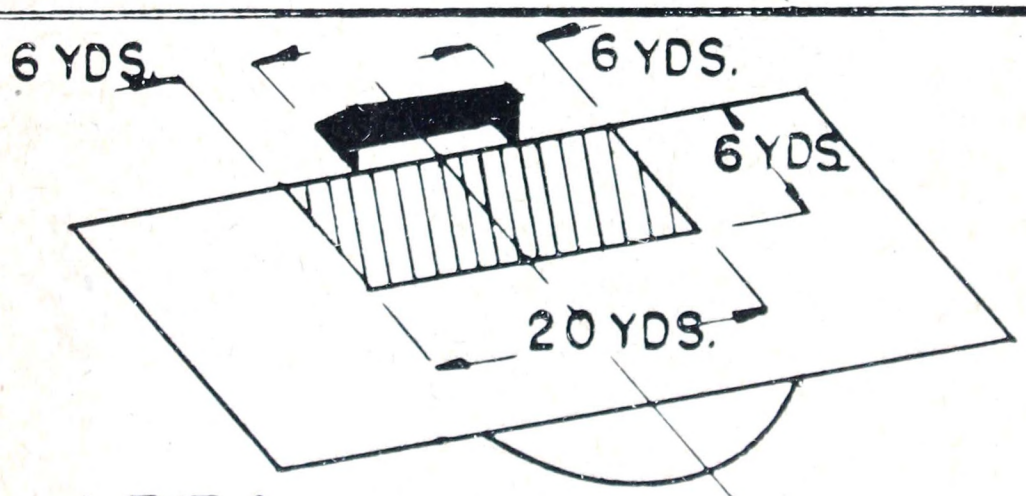

GOAL AREA

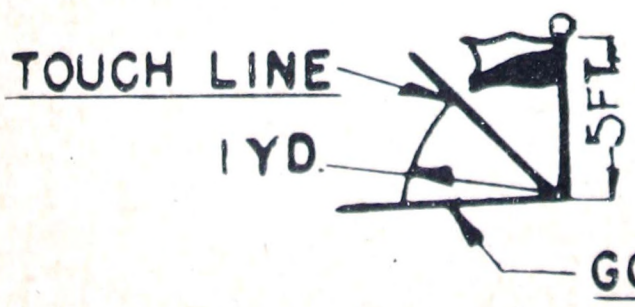

FLAG POSTS

Society for American Soccer History

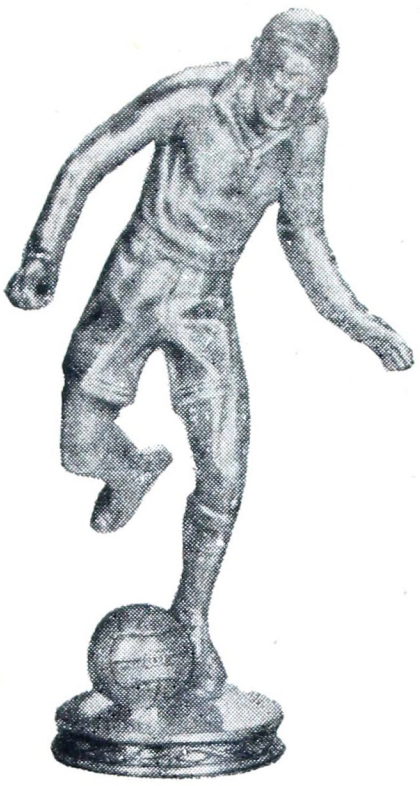



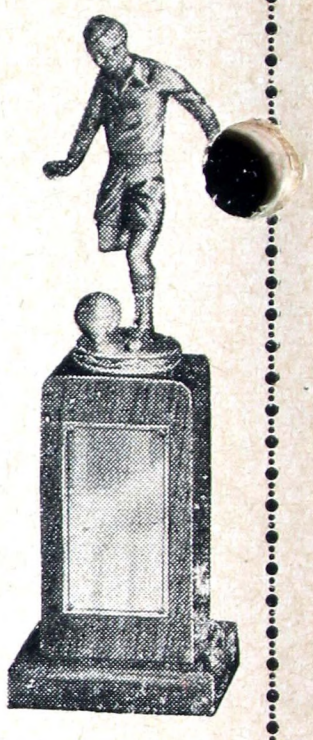

SOCCER
Medals - Cups - Trophies

●

CLUB EMBLEMS, RINGS, MEDALS, PRIZE CUPS,
STATUES AND OTHER USEFUL ARTICLES.

We have made **SOCCER PRIZES** since 1911
and have a very comprehensive variety of
samples from which to make a selection.

PRICES ARE VERY REASONABLE.

●

JOHNSON-NATIONAL INSIGNIA CO., INC.
Established 1894
314 WEST 14th STREET — NEW YORK 14, N. Y.

Phone CH 3-6592

Society for American Soccer History

GIL-ASH

All-American

SOCCER SHOES

Adopted by leading Universities everywhere

Until now only available from Switzerland

OUTSTANDING ATHLETIC SHOE OF THE YEAR

Upper one complete piece of leather. New red sponge rubber tongue permits tighter lacing, omits burning. Water proof. Sole molded to last, stitch- and nailed. Lining of finest full grained English Leather reinforces shoe at vital parts. Soft Scotch plaid, flannel "comforts" the forepart.



No. 375

Burgundy Color

Retan waterproof Leather
Waterproof Soles

No. 375B

Black English Kip Upper,
Detachable molded Studs
Waterproof Soles

GEO. GILLIS SHOE CORPORATION

FITCHBURG, MASS.

Society for American Soccer History



Society for American Soccer History